CRF-1

US Model
AEP Model
E Model

PLL SYNTHESIZED RECEIVER

SPECIFICATIONS

Circuit system — Dual conversion superheterodyne
Semiconductors — 21 ICs, 21 FETs, 68 transistors, 99 diodes (including 12 LEDs)
Frequency range — AM 10 kHz – 30 MHz (30,000 – 10 m)
Operating modes — AM (WIDE, NARROW), USB, LSB, CW
Intermediate frequency
1st: 55.845 MHz
2nd: 455 kHz

Sensitivity

Frequency	AM (NARROW)	SSB
10 kHz – 50 kHz	30 dB (30 μV)	20 dB (10 μV)
50 kHz – 30 MHz	0 dB (1 μV)	–10 dB (0.3 μV)

Selectivity

Mode / Band width	AM		SSB
	WIDE	NARROW	
–6 dB	More than 10 kHz	More than 4.4 kHz	More than 2.0 kHz
–60 dB	Less than 16 kHz	Less than 8.0 kHz	Less than 3.4 kHz

Image rejection — 1st: 100 dB at 10 MHz
2nd: 90 dB at 10 MHz
IF rejection — 90 dB at 10 MHz
Antennas — Telescopic antenna (150 kHz – 30 MHz)
External antenna terminals (10 kHz – 30 MHz) 50 – 75 ohms, BNC connector and 2-p terminal
Speaker — Approx. 10 cm (4 inches) dia.
Power output — 1.2 W (at 10% harmonic distortion) at dc operation
Inputs — Timer input jack (minijack)
Mute input jack (minijack)
Outputs — Recording output jack (minijack)
output level 150 mV (–14 dB)
output impedance 600 ohms
Headphones jack (stereo binaural type jack)
for 8-ohm impedance stereo or monaural headphones
External speaker jack (minijack)
Accepts 4 – 16 ohm speaker.

— Continued on page 2 —

SAFETY-RELATED COMPONENT WARNING!!

COMPONENTS IDENTIFIED BY SHADING AND MARK ⚠ ON THE SCHEMATIC DIAGRAMS, EXPLODED VIEWS AND IN THE PARTS LIST ARE CRITICAL TO SAFE OPERATION. REPLACE THESE COMPONENTS WITH SONY PARTS WHOSE PART NUMBERS APPEAR AS SHOWN IN THIS MANUAL OR IN SUPPLEMENTS PUBLISHED BY SONY.

SONY®

SERVICE MANUAL

www.shortwaveradio.ch

Power requirements	Receiver section: 12 V dc, eight batteries IEC designation R20 (size D) 100, 110, 120, 220 or 240 V ac with supplied Sony AC Power Adaptor listed on page 19. 12 V car battery with Sony Car Battery Cord DCC-120 (optional) 24 V car battery with Sony Car Battery Cord DCC-240 (optional) Memory circuit: 3 V dc, two batteries IEC designation R6 (size AA)
Battery life	Receiver section: Approx. 3 total hours of use with Sony Super Batteries SUM-1S (at normal listening level) Approx. 6 total hours with Eveready Heavy Duty Batteries No. 1250 Memory circuit: Approx. 1 year with Sony Super Batteries SUM-3S or Eveready Heavy Duty Batteries No. 1215
Dimensions	Approx. 260×100×330 mm (w/h/d) (10⅜×4×13⅛ inches) incl. projecting parts and controls, without carrying handle
Weight	Approx. 6.6 kg (14 lib 9 oz) incl. batteries or ac power adapror

SECTION 1
OUTLINE

1-1. CIRCUIT DESCRIPTION

This receiver is capable of receiving broadcast from 10 kHz to 30 MHz with one TUNING knob. This set is equipped with one-chip ICs to carry out band switching and PLL synthesizing, and to provide digital displays. A description of its circuit, divided into the signal circuit and synthesizer circuit, follows. The circuit will be described in signal section and synthesizer sections.

• Signal Circuit

This receiver has a built-in rod antenna. A preselector is also provided to enable tuning and matching to the rod antenna or external antenna.

When S503 (antenna selector switch) is set to the ROD ANT position, the signal from the rod antenna is applied directly to the preselector without passing the bandpass filter.

As the input impedance of the bandpass filter is matched to the impedance of an external antenna [50 to 75 ohms], the signal level will drop when the rod antenna is connected, so the signal is supplied directly to the preselector without going through the bandpass filter.

When the S503 switch is set to any other position, the signal is supplied to the receiver passing through the bandpass filter.

Any unwanted signal components of the signals from the antenna are eliminated by filters covering the spectrum in octaves, and supplied to a diode attenuator formed in π configuration.

The diode attenuator is a circuit provided for the elimination of cross modulation interference; since the signal that functions this attenuator circuit is derived from the output of the RF amplifier, its interference eliminating characteristics are better compared to conventional circuitry employing only an IF AGC circuit.

The signal that has passed through the RF amplifier is supplied to the first mixer.

The first mixer is a balanced mixer type circuit using a dual FET and here the first IF [55.845 MHz] is generated.

The local oscillator supplying the first mixer is VCO_1. Stable oscillation is provided by VCO_1 by means of a PLL synthesizer.

A crystal filter is used in the first IF amplifier circuit to prevent cross modulation. Also independent AM WIDE, AM NARROW, and SSB ceramic filters are provided in the second IF [455 kHz] amplifier circuit, to improve SSB selectivity and AM NARROW clarity.

Ignition noise and other similar forms of interference are eliminated by means of a noise blanker circuit.

The signal from the second IF amplifier is supplied to the detector circuit, and then to the audio frequency and power amplifiers.

SSB signals are mixed with a BFO signal by means of a balanced modulation circuit to demodulate the SSB signals, and then the demodulated signal is passed through a filter circuit and on to the audio frequency amplifier.

www.shortwaveradio.ch

- **RF AGC**

Figure 1 shows the RF AGC circuit.

Q120 and Q121 is a differential amplifier and when Q121 is ON, Q120 is OFF. If no strong signal is applied, then Q121 will be ON and Q120 will be OFF, while a positive direction bias is supplied to D111, turning it ON.

Therefore, the signal is supplied to the RF amplifier via C162, D111.

If signal is strong:

The signal amplified by the RF amplifier will be supplied to Q119 and amplified, and then further amplified by IC101.

The output of IC101 is detected by D109 and D110. The detected output is supplied to the base of Q120, and Q120 turns ON.

When Q120 turns on, Q121 turns OFF. Therefore, a positive direction bias is applied to D112 and D113, turning them on.

Therefore, the level of the signal is dropped by D112 and C163, to prevent cross modulation when there is a powerful signal input.

When Q120 turns ON, voltage is applied to the base of Q122 and Q122 turns ON. Gate of each RF amplifiers is connected to the collector of Q122. By changing the gate voltage of each of the RF amplifiers by Q122, RF amplifiers are under AGC (Automatic Gain Control).

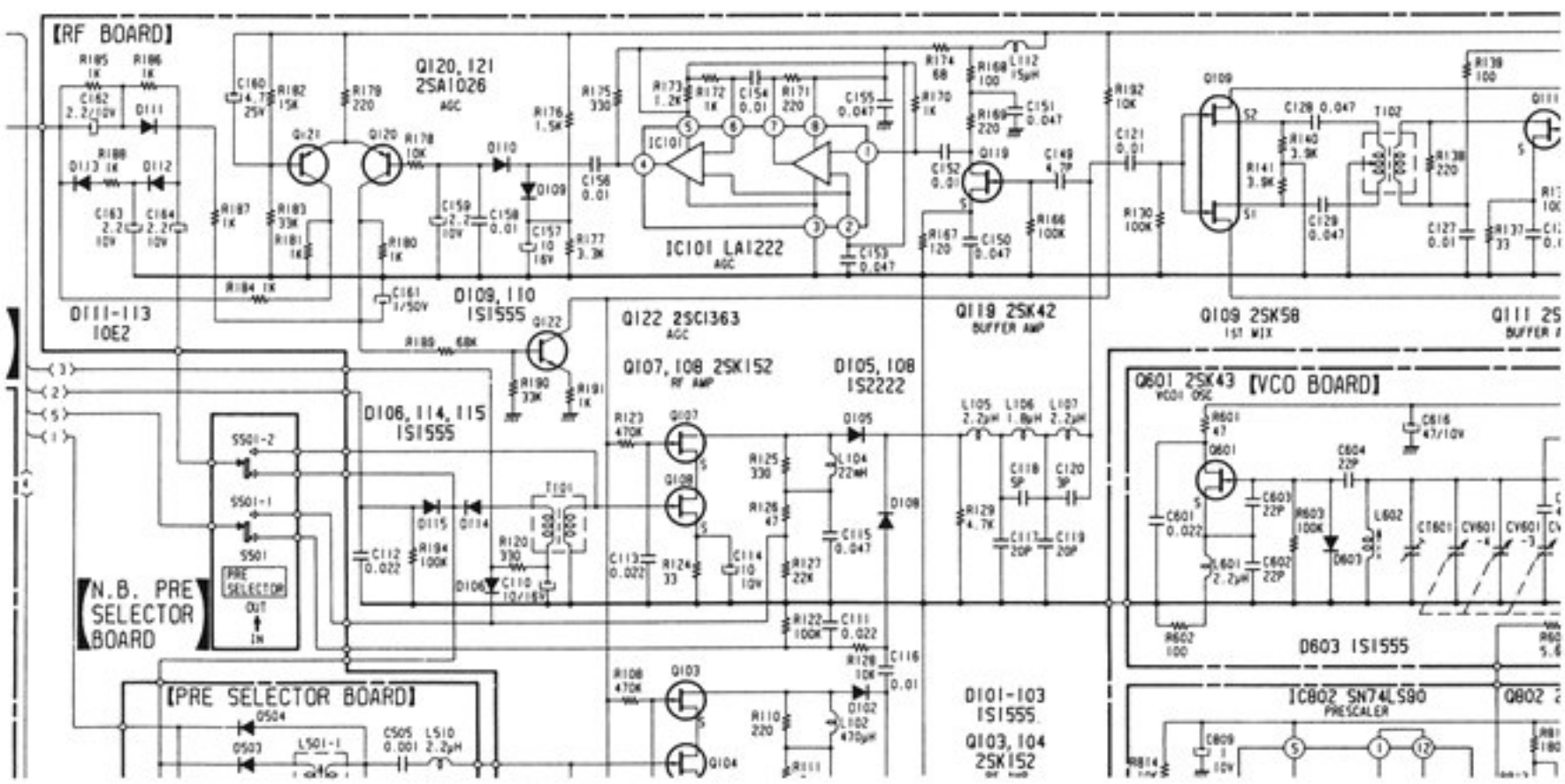

Fig. 1

www.shortwaveradio.ch

- **Noise Blanker Circuit (Look together with the schematic diagram.)**

The noise blanker circuit is a circuit that extracts and eliminates large pulse-type noises that are present in the signal components. This is performed in the following manner.

The signal from the second IF passes through CF101 and is supplied to IC201. It also passes through CF102 and is supplied to the noise blanker circuit.

The signal that has passed through CF102 is amplified by Q201 – Q204. The amplified signal is then supplied to Q206 and T201.

The signal supplied to T201 is detected by Q205. The detected signal is on the one hand supplied to Q201 – Q203 as the AGC signal, and, at the same time, to the emitter of Q206.

Q206 is a pnp transistor, and so it turns ON when the base potential drops to a value 0.6 volts lower than the emitter potential.

Suppose that signal (A) has come into Q204. This signal is amplified and supplied to the base of Q206.

Meanwhile, the signal that has passed through T201 is detected by Q205, and supplied to the emitter of Q206.

If there is any pulse-type noise present in the signal at this time, the pulse-type noise will be grounded by C218.

However, the voice signal components will be supplied as they are to the emitter of Q206.

At this time, insofar as the voice signal components are concerned, the negative components that are being supplied to the base and the signal that is being supplied to the emitter are in phase with each other. Therefore, Q206 turns ON only when there is pulse-type noise present.

When Q206 turns ON, Q207 also turns ON; the gate of IC201 closes, so only the pulse-type noise components are extracted and eliminated.

An AGC signal is supplied to Q201 – Q203 to prevent Q206 from turning on when a strong signal is supplied.

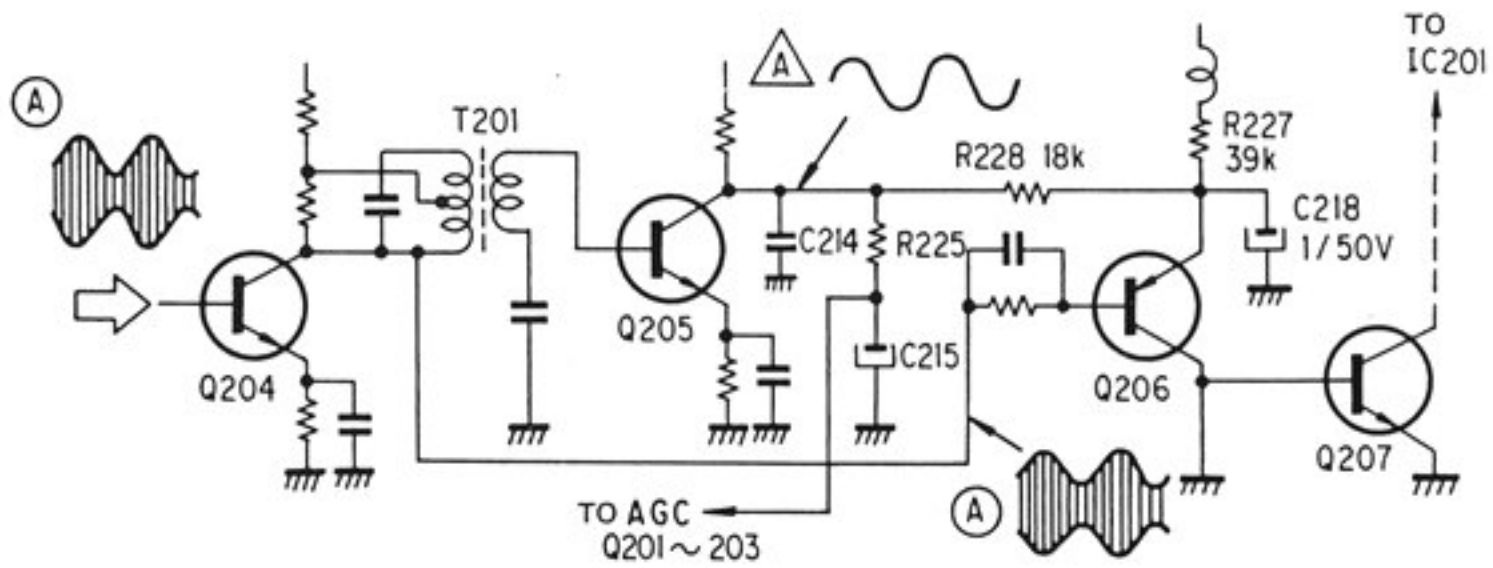

Fig. 2

www.shortwaveradio.ch

- **Synthesizer**

The synthesizer circuit controls the local oscillator circuitry. It is divided into a PLL circuit comprising IC803, a first oscillator, a second oscillator, a VCO, a VFO, and a digital display circuit comprising IC803.

Figure 3 shows a block diagram of this circuit.

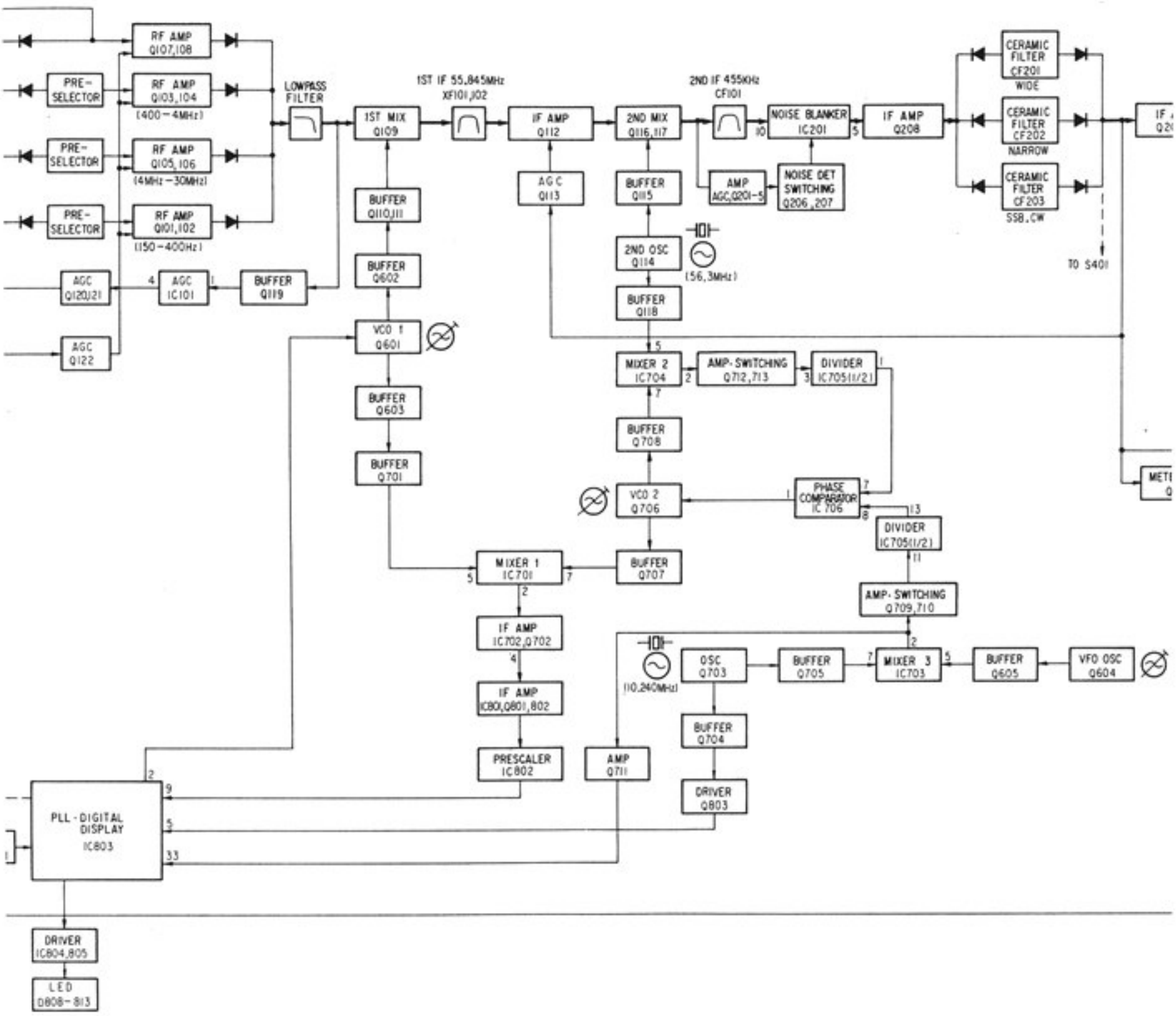

Fig. 3

www.shortwaveradio.ch

• **PLL Circuit (See Fig. 3.)**

This receiver is capable of receiving broadcasts from 10 kHz to 30 MHz with a single TUNING knob. In order to provide an accurate digital display in 100 Hz, the tuning knob can be set to either of two positions, pulled or pushed in.

When the TUNING knob is pulled, the PLL circuit is not locked, and it is in a free running state.

When the TUNING knob is pushed in, the PLL circuit is locked, and accurate reception down to increments of 100 Hz is possible.

When the TUNING knob is turned while pulled the frequency of VCO_1 [Q601] changes. When the TUNING knob is turned while pushed in, the frequency of VFO changes. The frequencies of VCO_1 and VFO do not change simultaneously.

The following description is on the PLL circuit.

When the TUNING knob is pushed in, the frequency of the VFO will change when the knob is turned. The VFO carries out its oscillating function using a lithium tantalum element, and is capable of providing high stability in its oscillations.

The signal from the VFO and the signal from the Q703 crystal oscillator circuit are mixed by IC703, and then, after passing through a frequency divider circuit [IC705], are supplied to a phase comparator [IC706].

Meanwhile, the oscillator signals from VCO_2 [Q706] and the second local oscillator [Q114] are mixed by IC704, and then, after passing through a frequency divider circuit [IC705], are supplied to one of the inputs of the phase comparator [IC706].

Because the second oscillator also uses a crystal oscillator circuit, it too provides high stability oscillations. The signals that go through a comparison process in the phase comparator are converted into a dc potential and supplied to the variable capacitance diode of VCO_2 to maintain the oscillation frequency of VCO_2 at a constant level.

The stabilized signal from VCO_2 and the signal of VCO_1 are mixed by IC701, frequency-divided by the prescaler [IC802], and then supplied to terminal (9) of IC803. They are again frequency-divided in IC803, and compared with reference signal.

The signal generated in the Q703 crystal oscillator circuit is frequency-divided in IC803 and is formed into reference signal.

These two signals are subjected to a comparison process, and the difference between them is converted into a dc potential which is supplied to the variable capacitance diode of VCO_1 to maintain the frequency of VCO_1 at a constant level.

Thus, accurate reception corresponding to the frequency of the input signals is provided.

• **Digital Display Circuit (See Fig. 4.)**

This receiver displays the accurate frequency of the signal being received on a digital display. This display is also controlled by IC803. A description of this circuit follows.

When the TUNING knob is turned while pulled the frequency display provides readouts in increments of only down to 1 kHz.

When the TUNING control knob is turned while pushed in, the frequency display provides readouts in increments of down to 100 Hz.

This is achieved automatically within IC803, by changing the level at terminal (39) (CS) of IC803 either to "H" or "L".

Figure 4 shows the schematic diagram of this section.

IC809-4 in Fig. 4 is an exclusive OR type IC. It is an IC that produces "L" level outputs when the inputs are the same.

When the TUNING knob is pulled, both inputs are "H" level and the output drops to "L" level. The output of IC809-4 is supplied to one of the inputs of IC808-3. As IC808-3 is a NAND, the circuit is controlled within the IC so that if one of the inputs is "L" level, the outputs will rise to "H" level. Then the output of IC808-3 in turn becomes "H" level, terminal (39) of IC803 becomes "H" level, and 100 Hz increment displays will not be provided.

When the TUNING control is pushed in, terminal (7) of IC803 drops to "L" level and turns Q808 "ON". When Q808 turns ON, the emitter drops to L level and raises the output of IC808-4 to "H" level.

Meanwhile, terminal (9) of IC809-4 drops to "L" level, raising the output of IC809-4 to "H" level.

When both inputs of IC808-3 is at "H" level, the output will be "L" level, then terminal (39) of IC803 will be "L" level, providing 100 Hz increment displays.

When the TUNING knob is pulled, a signal consisting of mixture of the signals from VCO_1 and VCO_2 is supplied to terminal (9) of IC803 and a counting operation takes place by the counter within the IC. At this time, the signal supplied to terminal (33) is also counted.

When the TUNING knob is pushed in, the frequency immediately prior to the control knob's being pushed in is latched and memorized. Also, the frequency of VCO_1 is changed from a state of free-running to a locked state.

A signal consisting of a mixture of the signals from Q703 and Q604 (VFO) is supplied to terminal (33) of IC803. When the TUNING control knob is turned at this time, the rotation is detected by a photo-coupler Q406 and this signal is supplied to terminal (34). [See Fig. 5.]

www.shortwaveradio.ch

When the level of terminal (38) (CD) changes from "H" to "L" or from "L" to "H", the signal applied to terminal (33) will be counted by the counter within.

At this time, once the contents of the counter are rewritten, the counter stops counting until the level of terminal (38) next changes to "H" or "L".

When the TUNING knob is turned eigher fully clockwise or counter-clockwise, the lower three digits of the digital display will go out. This is because certain numbers have been preset on the counter within the IC so that when the numbers are exceeded, a blanking signal is automatically generated.

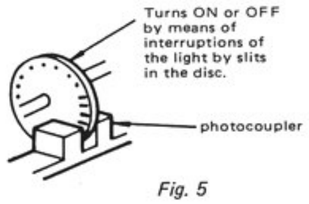

Fig. 5

- **Mode Selecting**

Selecting of the mode of reception is carried out by changing terminals (34) to (36) of IC803 to "H" or "L" level.

Mode \ Terminal No. of IC803	(34)	(35)	(36)
AM	0	0	0
USB	0	1	0
LSB	1	0	0

1 = H
0 = L

- **The Function of Terminal (39) (CS) of IC803**

When this terminal is at "H" level, PLL will be released from the locked condition and the VCO_1 will be in free-running condition. At this time, the receiving frequency is controlled by the VCO_1 alone. (TUNING knob-pulled.)

- **The Function of Terminal (38) (CD) of IC803**

Terminal (39) functions only at "L" level, detects the rotation of the dial, and supplies the signal.

The frequency of the VFO is counted when the level at terminal (39) changes from "H" to "L" or "L" to "H".

When once counted, the counter stops until the level at terminal (38) changes from "L" to "H" or "H" to "L" the next time.

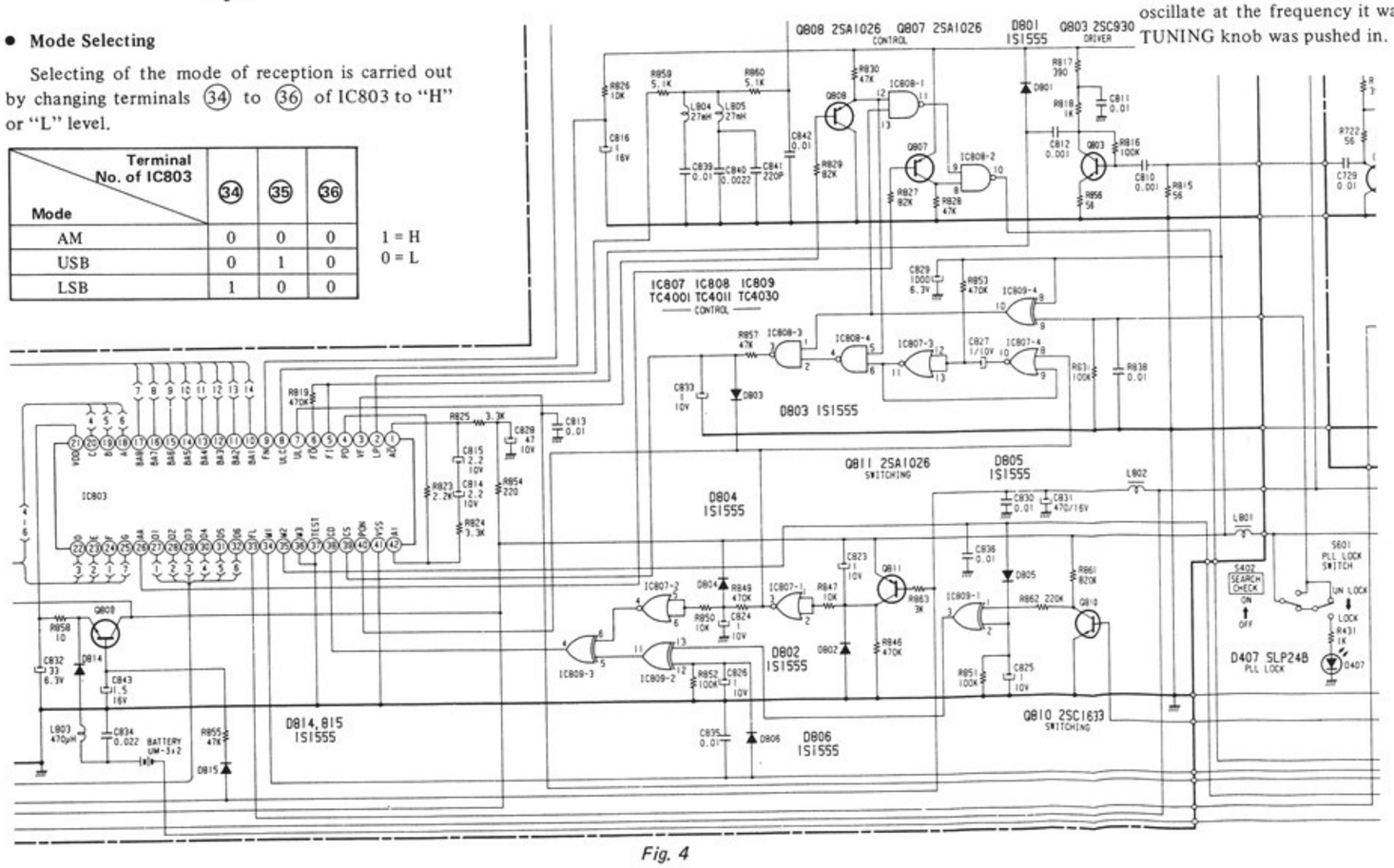

Fig. 4

- **SEARCH Circuit**

Since the frequency display changes when the TUNING knob is pushed in from a pulled out condition, it may cause inconvenience. By depressing switch S402 a display of the previous frequency will be provided. The description of this circuit will be given below.

When S402 in Fig. 4 is set to the "ON" position, terminal (9) of IC809-4 rises to "H" level. This is the same condition as when the TUNING knob is pulled, and so terminal (39) of IC803 rises to "H" level.

When terminal (39) of IC803 is at "H" level, a signal consisting of a mixture of the signals from VCO_1 and VCO_2 is being counted by IC803, and so this frequency will then be displayed.

When the TUNING control knob is pushed in, the variable capacitor of VCO_1 cloes not mechanically rotate. On the other side, when terminal (39) rises to "H" level, only a certain voltage is applied to the variable capacitance diode of VCO_1 and VCO_1 will oscillate at the frequency it was oscillating before the TUNING knob was pushed in.

- **Control Circuit**

* On MUTING

The schematic diagram shown in Fig. 6 is the muting circuit.

The MUTING circuit is designed so that muting is performed when the frequency of the received signal is 0 Hz. The muting signal is produced at terminal (26) of IC803.

When the frequency of the received signal is 0 Hz, terminal (26) is at "H" level. Therefore, Q807 is "OFF" and terminal (8) of IC808-2 drops to "L" level, while terminal (10) rises to "H" level, turning Q405 "ON" to perform muting.

Whenever the frequency of the received signal being received is anything other than 0 Hz, terminal (26) of IC803 is at "L" level, Q807 turns "ON" and terminal (8) of IC808-2 goes to "H" level.

Meanwhile, terminal (11) of IC808-1 is constantly at "H" level and terminal (10) of IC808-2 drops to "L" level turning Q405 "OFF".

- **Under Switch Power "ON"**

When the power is switched "ON", terminals (1), (2) of IC807-1 rises to "H" level for a certain length of time by C823 and R846. Therefore, terminal (3) will be at "L" level for a certain length of time.

Therefore, terminal (40) (PON) of IC803 also drops to "L" level for a certain length of time.

As long as terminal (40) is at "L" level, inputs to terminals (38) (CD) and (39) (CS) are inhibited.

- **Control of Terminal (39) (CS) of IC803**

If the TUNING knob is pulled, turned and pushed in after the power has been switched off, or if the backup battery should run down, the preset value of the programmable counter in IC803 will change, and so the counter display readouts will become incorrect.

The following circuit functions in order to prevent this from happening.

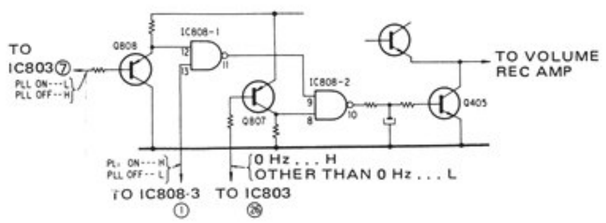

Fig. 6

www.shortwaveradio.ch

Normally, after switching the power "ON" and before terminal (40) (PON) rises to "H" level, terminal (7) (UL) drops from "H" level to "L" level, but in such abnormal situations as described above, terminal (7) (UL) will rise to "H" level even when terminal (40) (PON) is at "H" level.

When it rises to "H" level, Q808 will turn OFF, and terminal (5) of IC808-4 will rise to "H" level.

Meanwhile, as terminal (40) (PON) of IC803 is connected to terminal (8) IC807-4, it will be at "L" level for a while after the power is switched ON. Terminal (9) of IC807-4 is connected to terminal (11) of IC807-3 and is at "L" level. Therefore, terminal (10) of IC807-4 rises to "H" level.

However, when terminal (40) (PON) of IC803 rises to "H" level, terminal (10) of IC807-4 drops to "L" level. Therefore, a charging current to C827 starts flowing through R853. At the same time, terminals (12), (13) of IC807-3 drops to "L" level. Therefore, terminal (11) of IC807-4 rises to "H" level. Terminals (5), (6) of IC808-4 rises to "H" level, and terminal (4) drops to "L" level. Therefore, terminal (3) of IC808-3 rises to "H" level, and the level at terminal (39) (CS) of IC803 rises to "H" level.

When the charged current at C827 reaches the voltage to raise the level at terminal (12), (13) of IC807 to "H" level, terminal (11) of IC807-3 drops to "L" level and terminal (4) of IC808-4 rises to "H" level.

Therefore, terminal (3) of IC808-3 drops to "L" level.

During PLL lock, terminal (1) of IC808-3 is at "H" level.

When terminal (39) of IC803 is raised to "H" level, the PLL circuit changes from a locked state to a state of free-running, and VCO_1 rises to a certain frequency. The VFO also rises to a certain frequency. These two frequencies are counted by the counter within IC803.

Therefore, the frequency to which the TUNING knob is tuned is counted once again by IC803, and as soon as terminal (39) drops to "L" level, the frequency is latched and memorized.

- **Control of Terminal (38) (CD) of IC803**

How terminal (40) (PON) changes from "L" level to "H" level little after the power has been switched ON has already been mentioned before. The lower three digits of the digital counter are counted by changing terminal (38) (CD) from "H" level to "L" level after terminal (40) has come to "H" level.

This is to enable correct display of the frequency, even if the TUNGIN knob is turned after the power has been switched "OFF". IC807-2 and IC809-3 are provided for this purpose. When the power is switched "ON", terminal (3) of IC807-1 rises to "H" level after a slight time-lag, and the signal is supplied to the lagging network comprised of R849 and C824.

IC807-2 is an inverter. After the power has been switched "ON", terminal (4) of IC807-2 stays at "H" level until the charging of C824 has attained a certain potential.

When the charging potential of C824 has attained a certain level, it now changes to "L" level.

The role of terminal (38) (CD) has already been discussed; it is to carry out a display of the lower three digits of the frequency during PLL lock. When the level of terminal (38) (CD) is changed from "H" to "L" level or from "L" to "H" level, while terminal (39) (CS) is at "L" level, it counts the frequency of the VFO.

- **Timing Chart of Each Section**

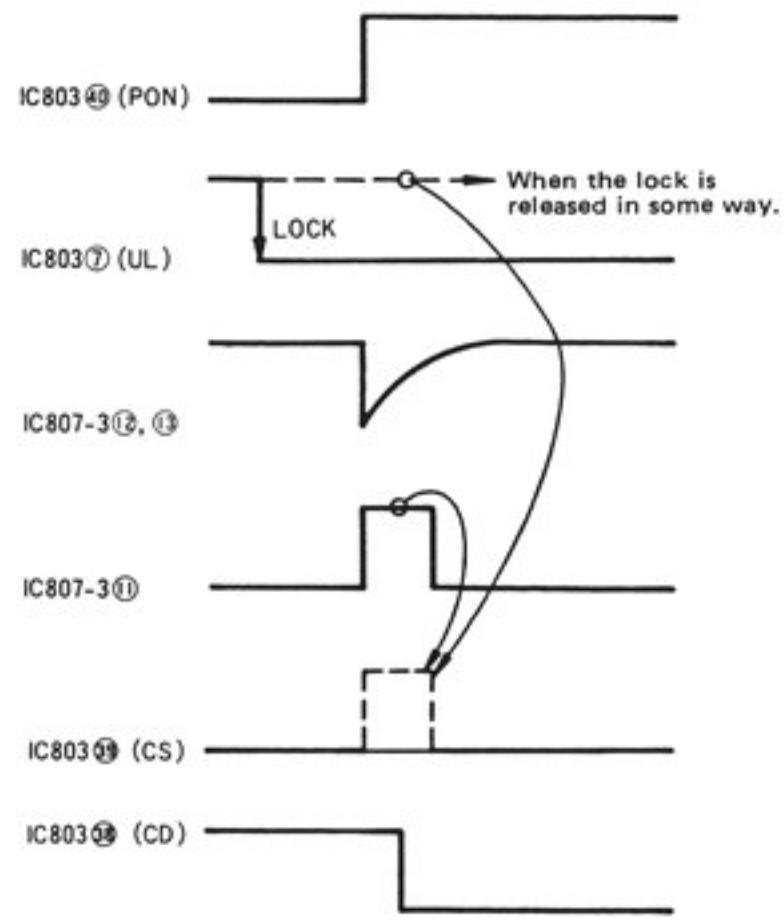

Fig. 7

www.shortwaveradio.ch

CRF-1

1-2. BLOCK DIAGRAM

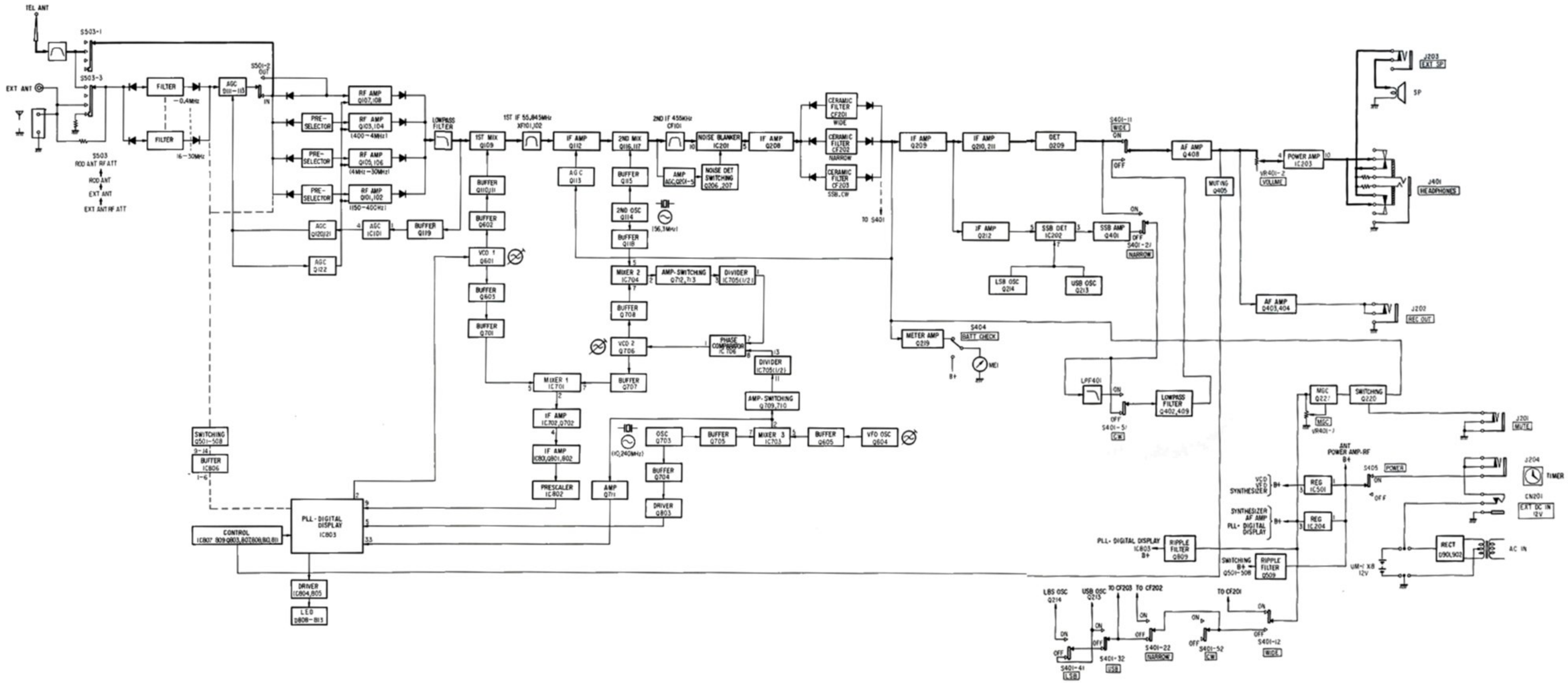

www.shortwaveradio.ch

SECTION 2
DISASSEMBLY

- Follow the disassembly procedure in the numerical order (❶ – · · · · , or ⚠ – · · · ·) given.

UPPER COVER

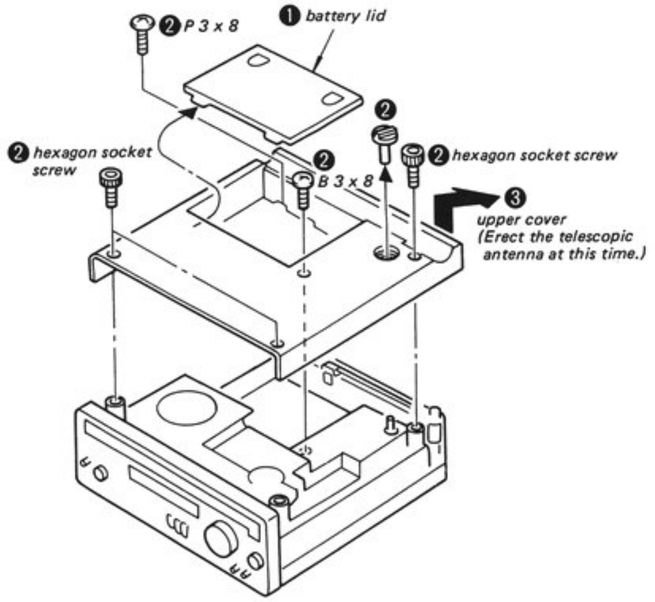

LOWER COVER

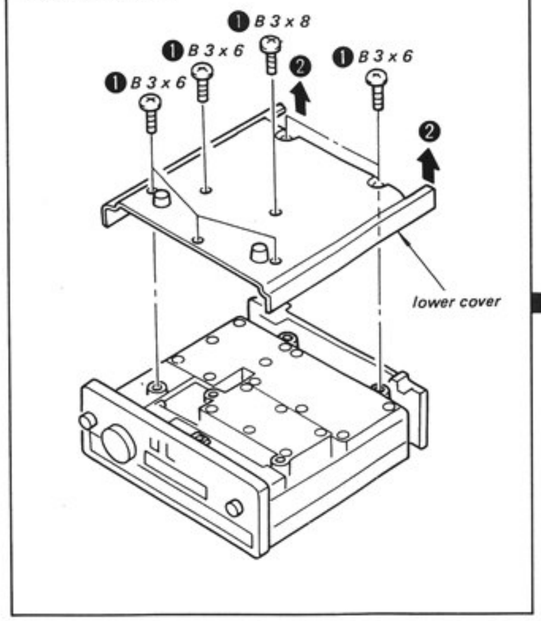

FILTER·RF· SYNTHESIZER BOARDS

❶ – ❻ : RF·filter boards
⚠ – ⚠4 : synthesizer boards

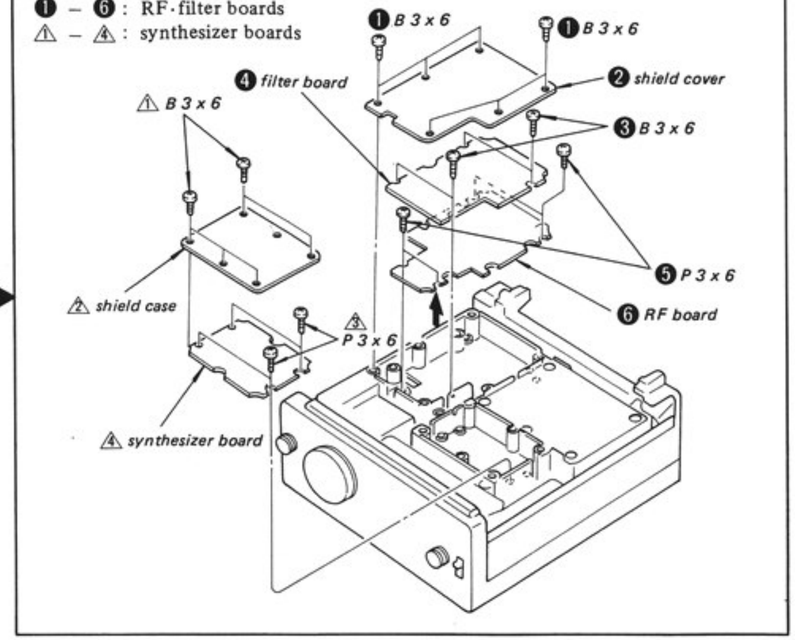

ANTENNA·PRESELECTOR BOARD

❶ – ❹ : antenna board
⚠ , ⚠2 : preselector board

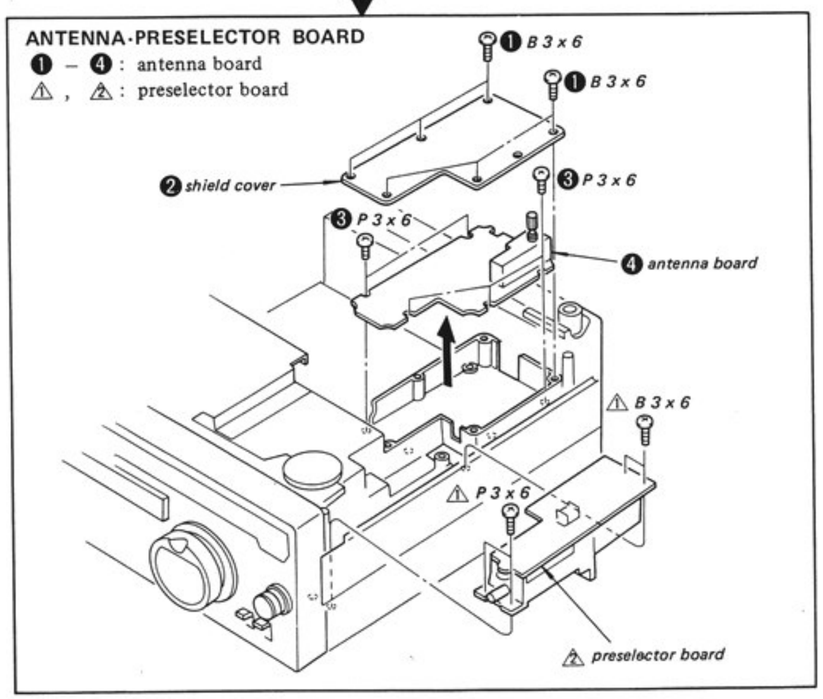

FRONT PANEL · REAR PANEL

❶ – ❸ : front panel
⚠ , ⚠2 : rear panel

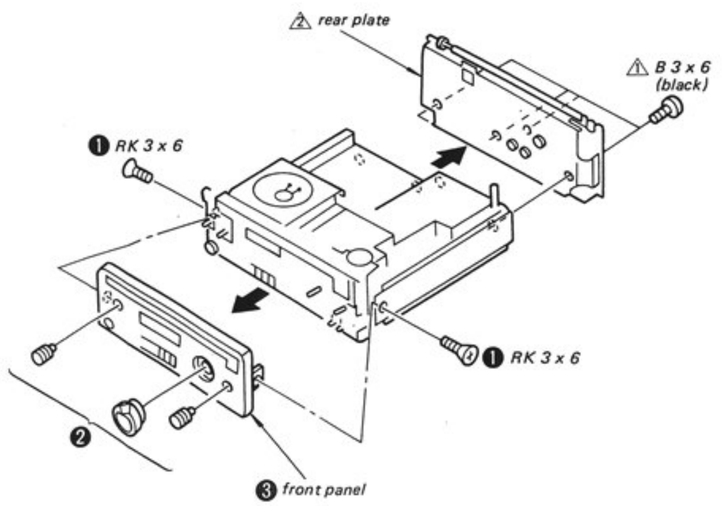

www.shortwaveradio.ch

Just remove the front panel.

COUNTER BOARD (1)

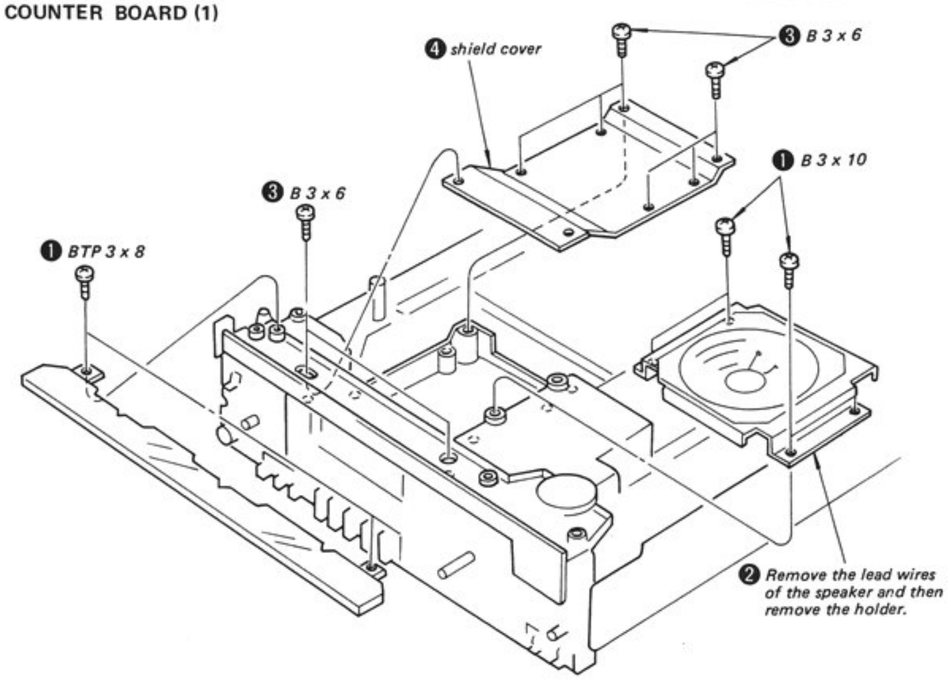

FRONT CHASSIS · COUNTER BOARD

❶ – ❸ : front chassis
⚠ , ⚠ : counter board

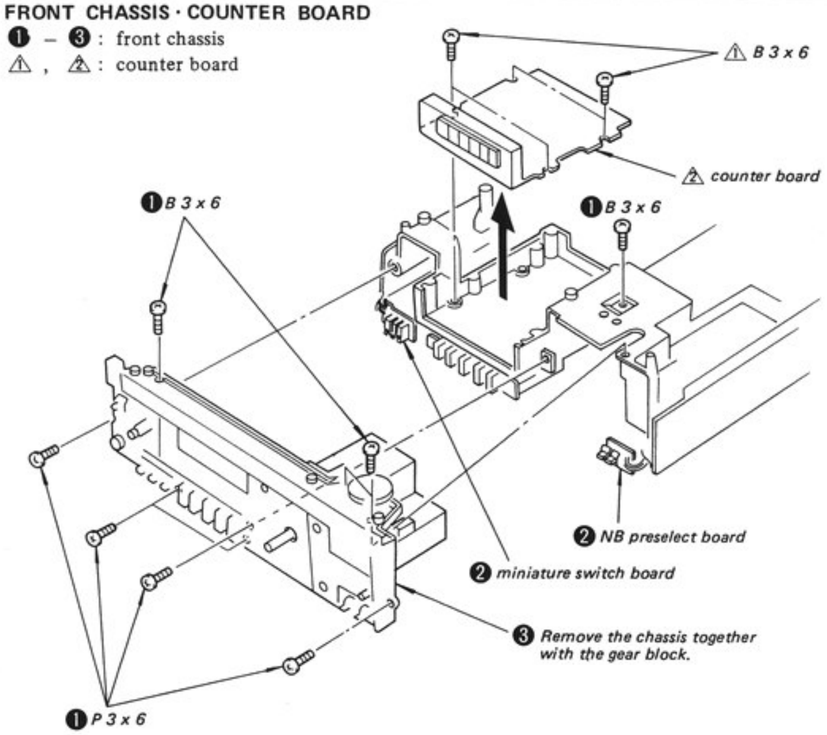

IF · AF BOARD

Just remove the rear panel.

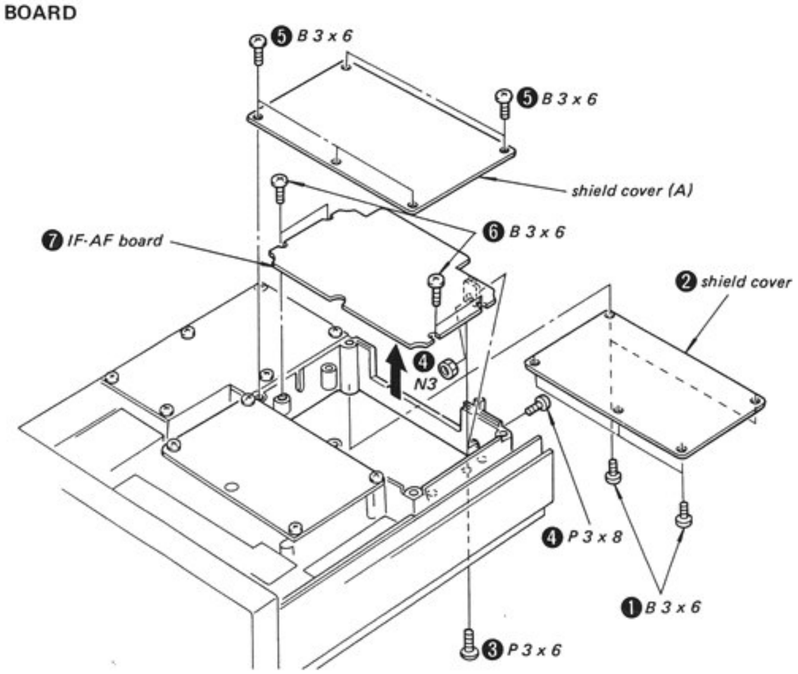

GEAR BLOCK

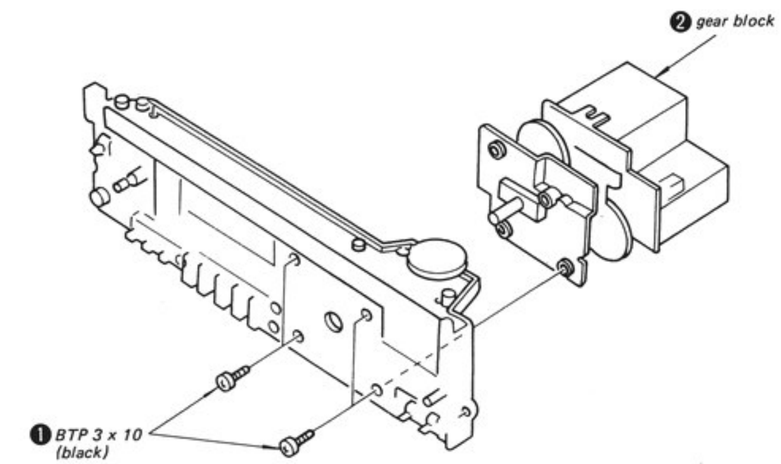

www.shortwaveradio.ch

DIAL CORD STRINGING

1. Preparation.

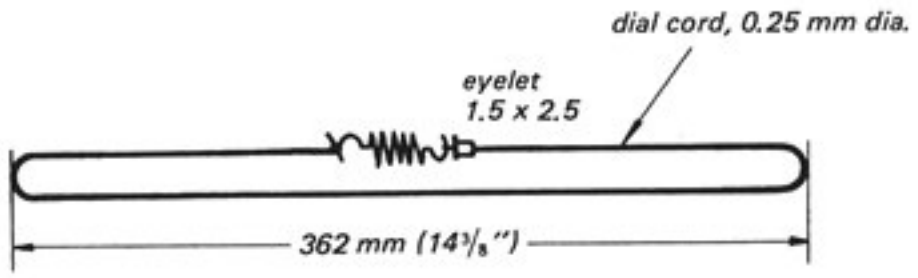

2. Stringing.
   - Turn the tuning shaft fully clockwise.
3. String the dial cord.
   - Hold and pull the other end of the dial cord (❽) with the other hand at step ❶ .

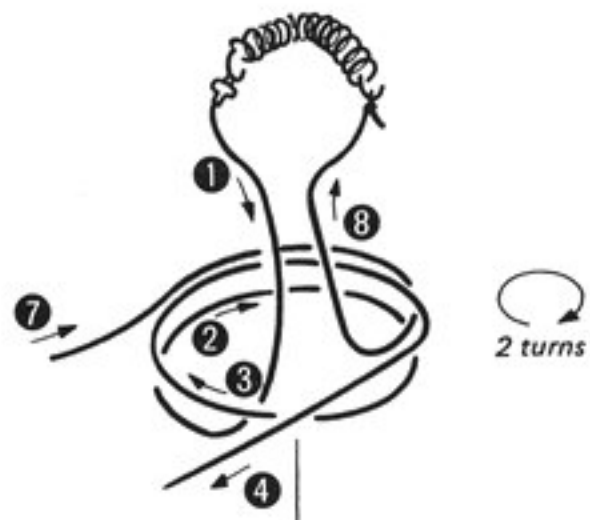

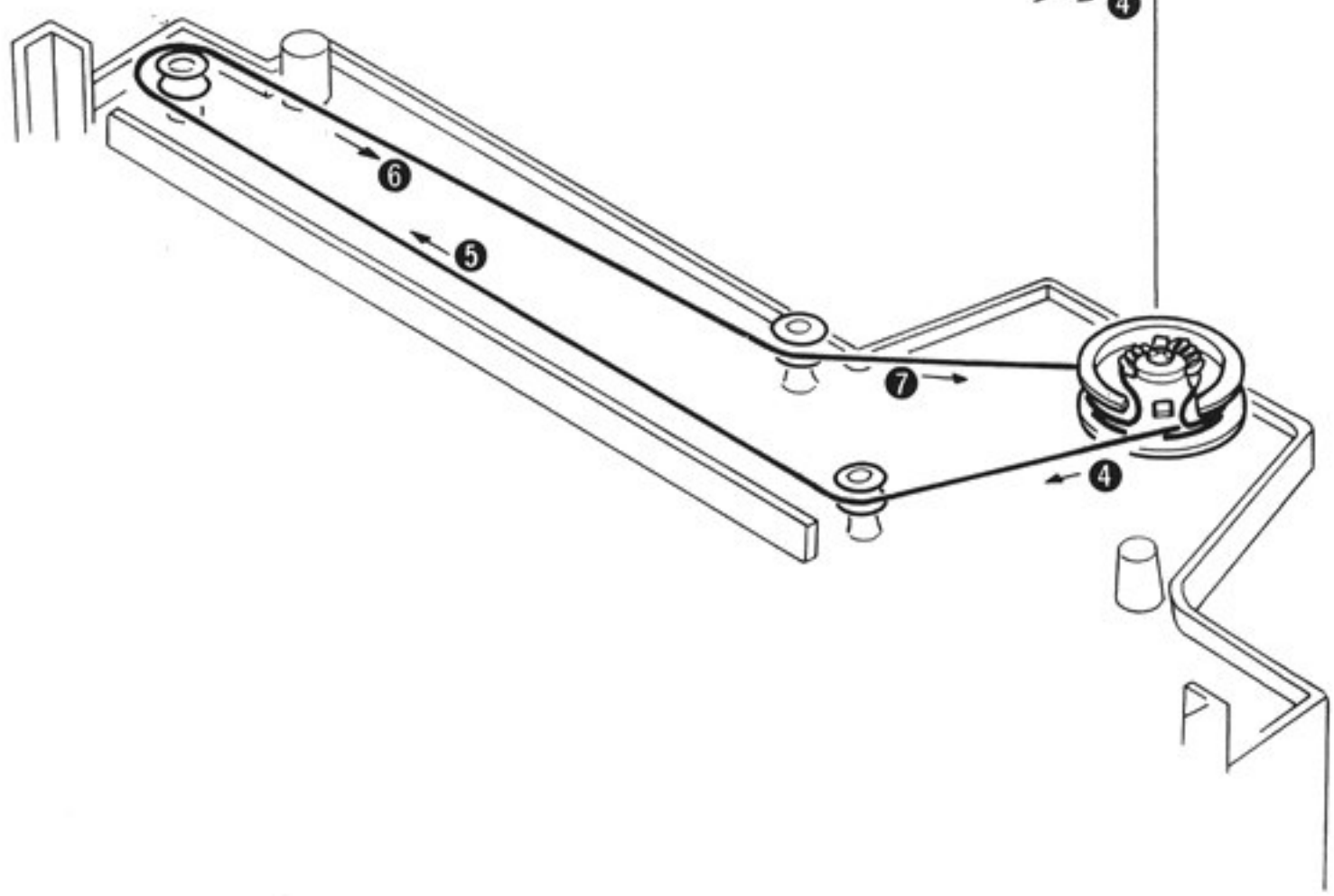

4. Dial Pointer Setting.
   - Set the dial pointer so that the figure on the frequency counter and the figure on the dial scale match together.
     Confirm that the dial pointer does not slip when turning the TUNING knob.
   - Fix the dial pointer with a locking compound.

www.shortwaveradio.ch

PRESELECTOR CORD STRINGING

1. Preparation.

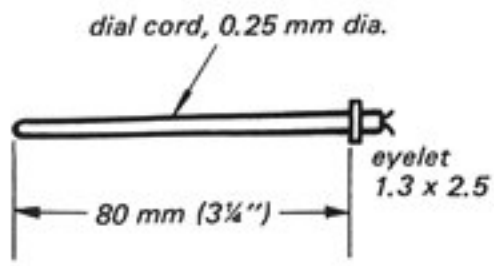

2. String the cord so that the eyelet comes to the position shown below.

3. String the cord four times around the shaft.

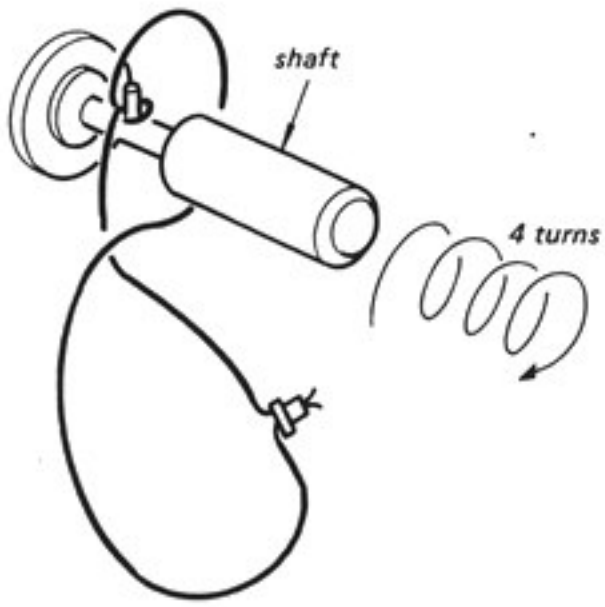

4. String the cord as follows.

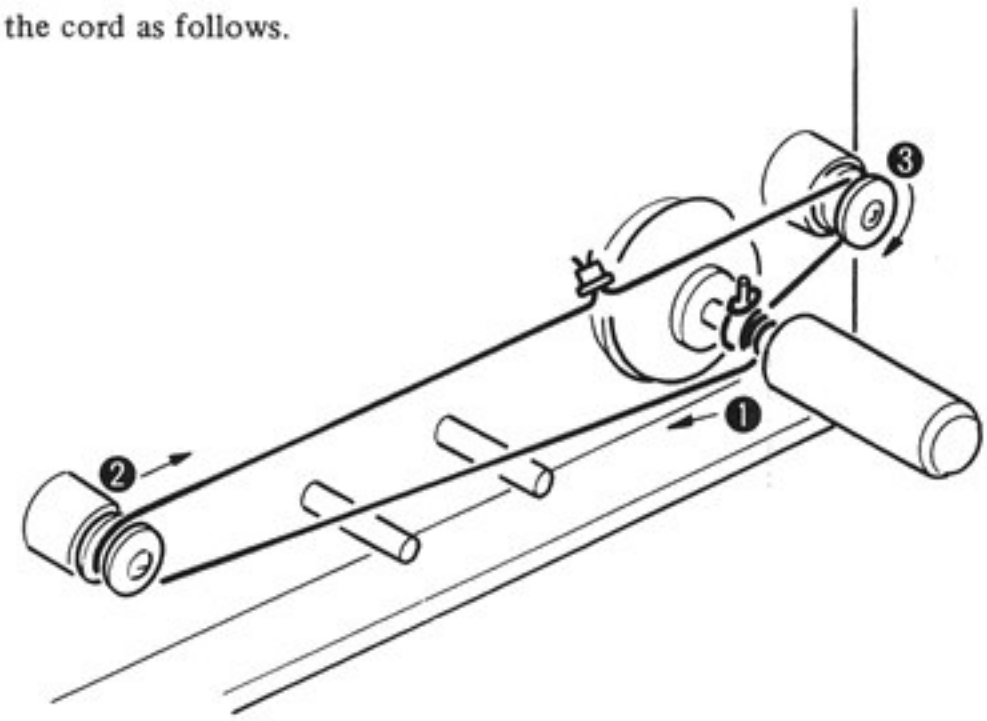

5. Dial Pointer Setting.
   - Install the front panel. Set the dial pointer so that the figure on the frequency counter and the figure on the dial scale match together. Confirm that the dial pointer does not slip when turning the TUNING knob.
   - Fix the dial pointer with a locking compound.

www.shortwaveradio.ch

SECTION 3
ADJUSTMENTS

When performing the adjustment generally, perform in the order as follows.

1. Synthesizer Section Adjustments
   - ① reference frequency osc adjustment
   - ② secondary local osc adjustment
   - ③ mixer balance adjustment
   - ④ VFO frequency coverage adjustment
   - ⑤ VCO_2 adjustment
   - ⑥ VCO_1 frequency coverage adjustment
2. IF Adjustments
   - ① IF adjustment 1
   - ② IF adjustment 2
3. Preselector Adjustment

Reference Frequency Osc Adjustment (10.24 MHz)

1. Turn CT701 and adjust for 10.24 MHz frequency osc.
   Specification: 10.24 MHz±10 Hz

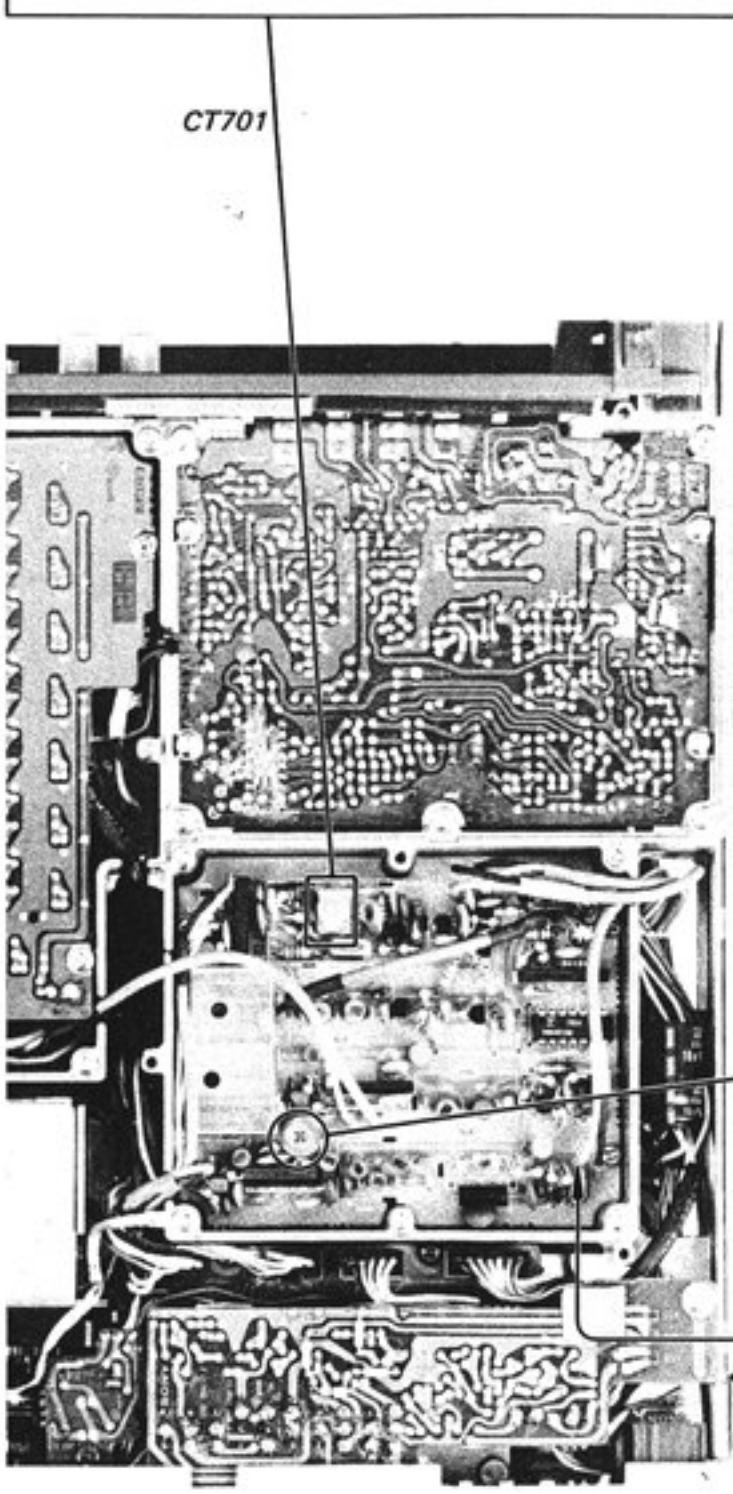

Mixer Balance Adjustment

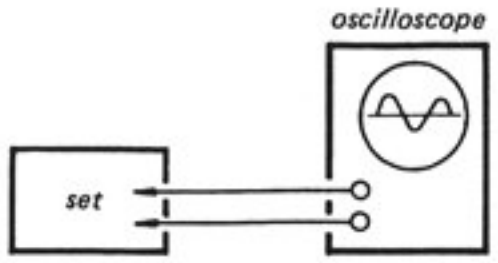

Use an oscilloscope capable of 50 MHz measurement.

1. Turn the TUNING knob and obtain 30 MHz.
2. Turn VR701 and obtain a clear preferable waveform on the oscilloscope.

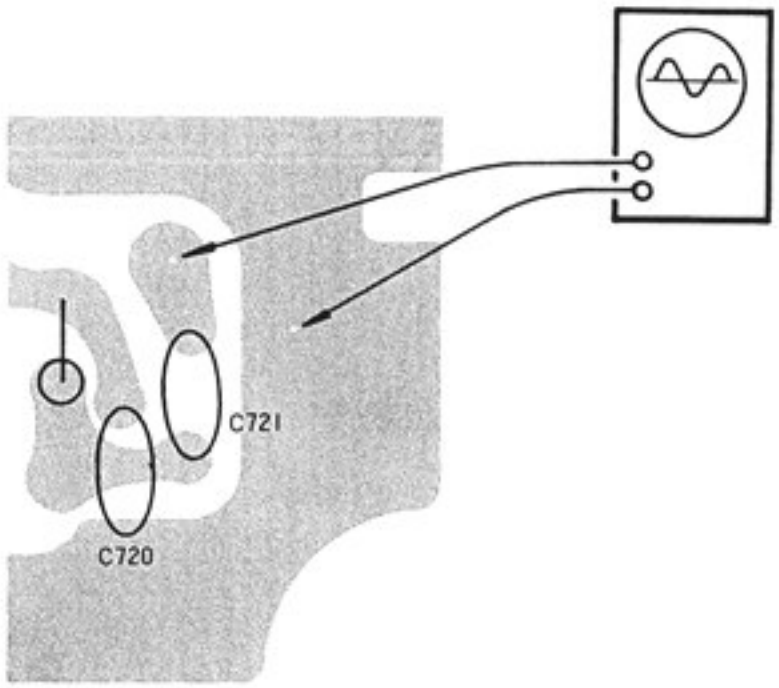

www.shortwaveradio.ch

Secondary Local Osc Adjustment (56.3 MHz)

Setting: MODE switch – NARROW

1. Turn the core of T106 fully clockwise. (The oscillation will stop.)
2. Next, gradually turn T106 counterclockwise. Then the oscillation will start again.
   Memorize the point where the waveform reaches the maximum point.
3. Continue turning the core of T106 counterclockwise, then the waveform will become small. Set the core where the waveform is 15 % smaller than at the maximum point.
4. Turn the core of T107 and adjust for the maximum waveform.

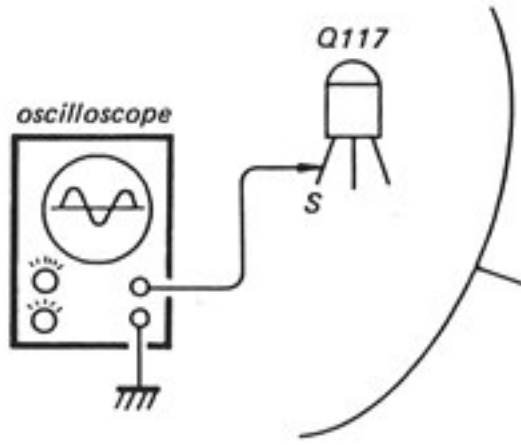

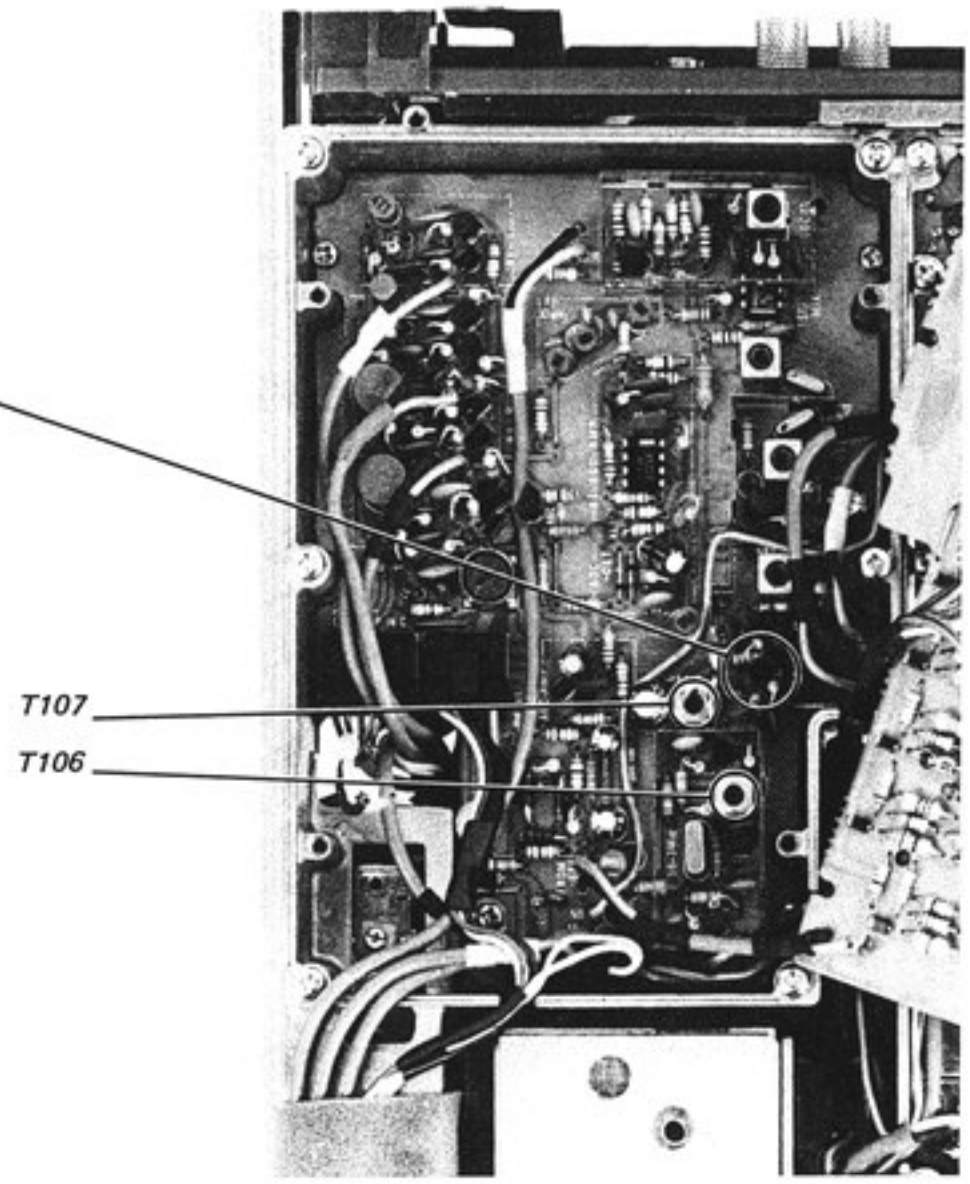

www.shortwaveradio.ch

VFO Frequency Coverage Adjustment

1. Pull the TUNING knob, turn and set to 10.0 MHz. Then push in the knob and turn it fully counterclockwise.
2. Adjust CT602 to obtain 10,000.0 digital frequency display.
3. Turn the TUNING knob fully clockwise and adjust the core of L604 to obtain 10,099.9 digital frequency display.
4. Repeat steps 1 – 3 several times.
5. First turn the TUNING knob fully counterclockwise and set at 10,000.0. Then turn it a little clockwise and set at 10,005.0. (The angle of the knob at this time is approx. 35° from the left.)
6. Under this condition, adjust CT602 to obtain 10,000.0 digital frequency display.
7. Turn the TUNING knob fully clockwise and then approx. 35° counterclockwise.
8. Adjust the core of L604 to obtain 10,099.9 digital frequency display.
9. Repeat steps 5 – 8 several times.

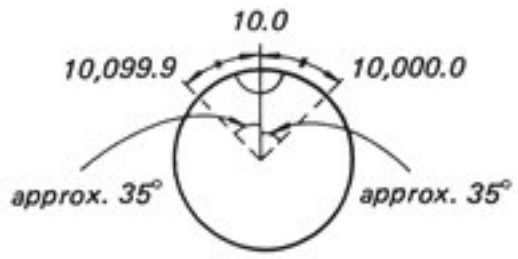

When using a frequency counter, adjust for the following specification.

When the TUNING knob is turned fully counterclockwise:

12,500 MHz±0.5 kHz CT602

When the TUNING knob is turned fully clockwise:

12,390 MHz±0.5 kHz L604

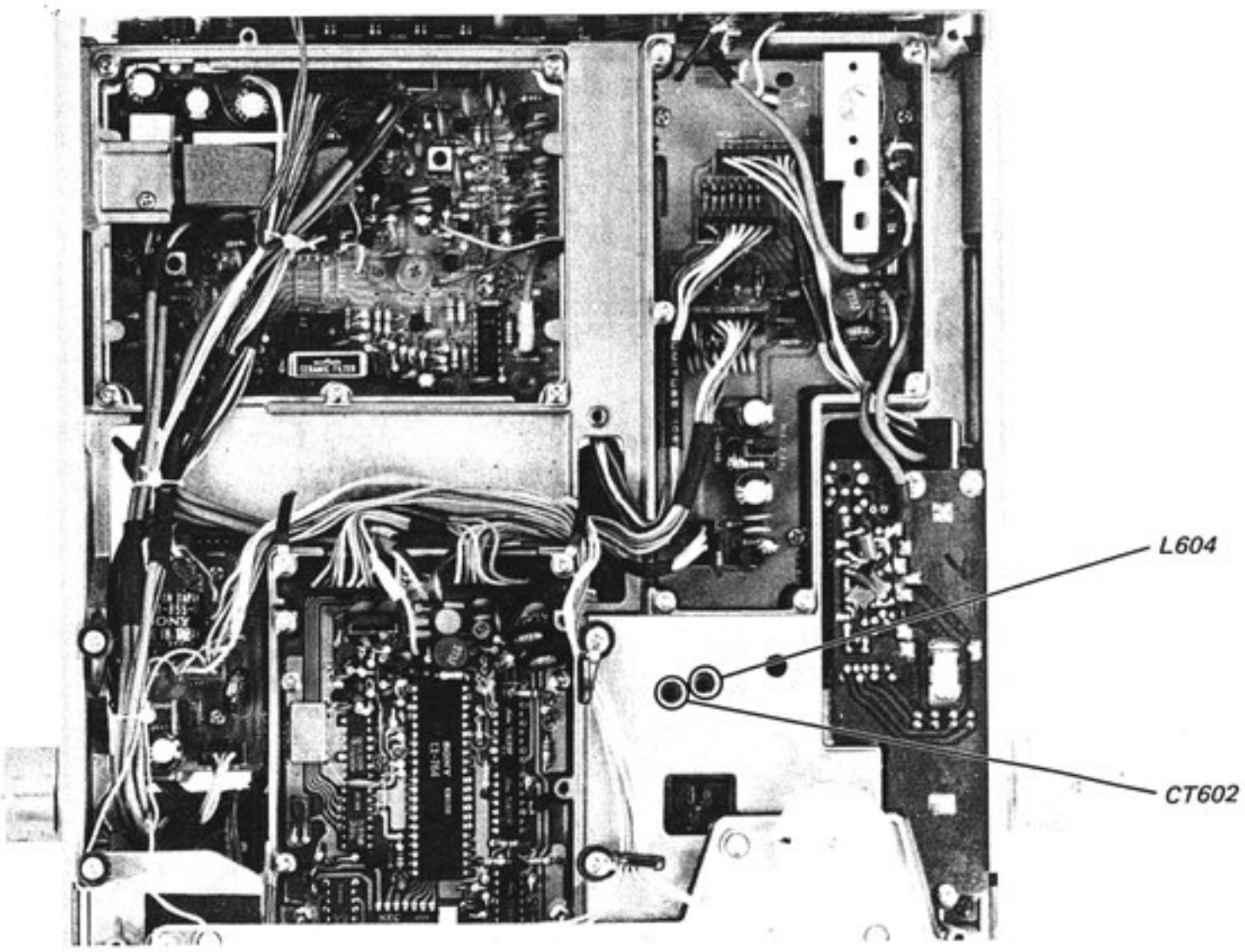

www.shortwaveradio.ch

VCO Frequency Coverage Adjustment

Simple Way

1. Pull the TUNING knob and turn fully clockwise.
2. Adjust CT601 to obtain 30.850 digital frequency display.
3. Turn the TUNING knob to obtain 30.000 digital frequency display.
4. Adjust the dial pointer so that it points 30 MHz.
5. Next, turn the TUNING knob counterclockwise and set the dial pointer at "0".
6. Turn the core of L602 so that the digital frequency display shows "000".
7. Turn the TUNING knob further counterclockwise. Confirm that the dial pointer moves more than 7 mm left from "0".
8. Turn the TUNING knob and set the dial pointer at 30 MHz. Confirm that the digital frequency display shows 30.000.
   When it does not show 30.000, then repeat steps 2 – 8 several times.
   After the adjustment, confirm that the dial pointer and the digital frequency display matches together at 0.5, 5.0, 10, 15, 20, 25.

When using a frequency counter, adjust for the following specification.

fmin 55.292 MHz±20 kHz L602
fmax 86.703 MHz±50 kHz CT601

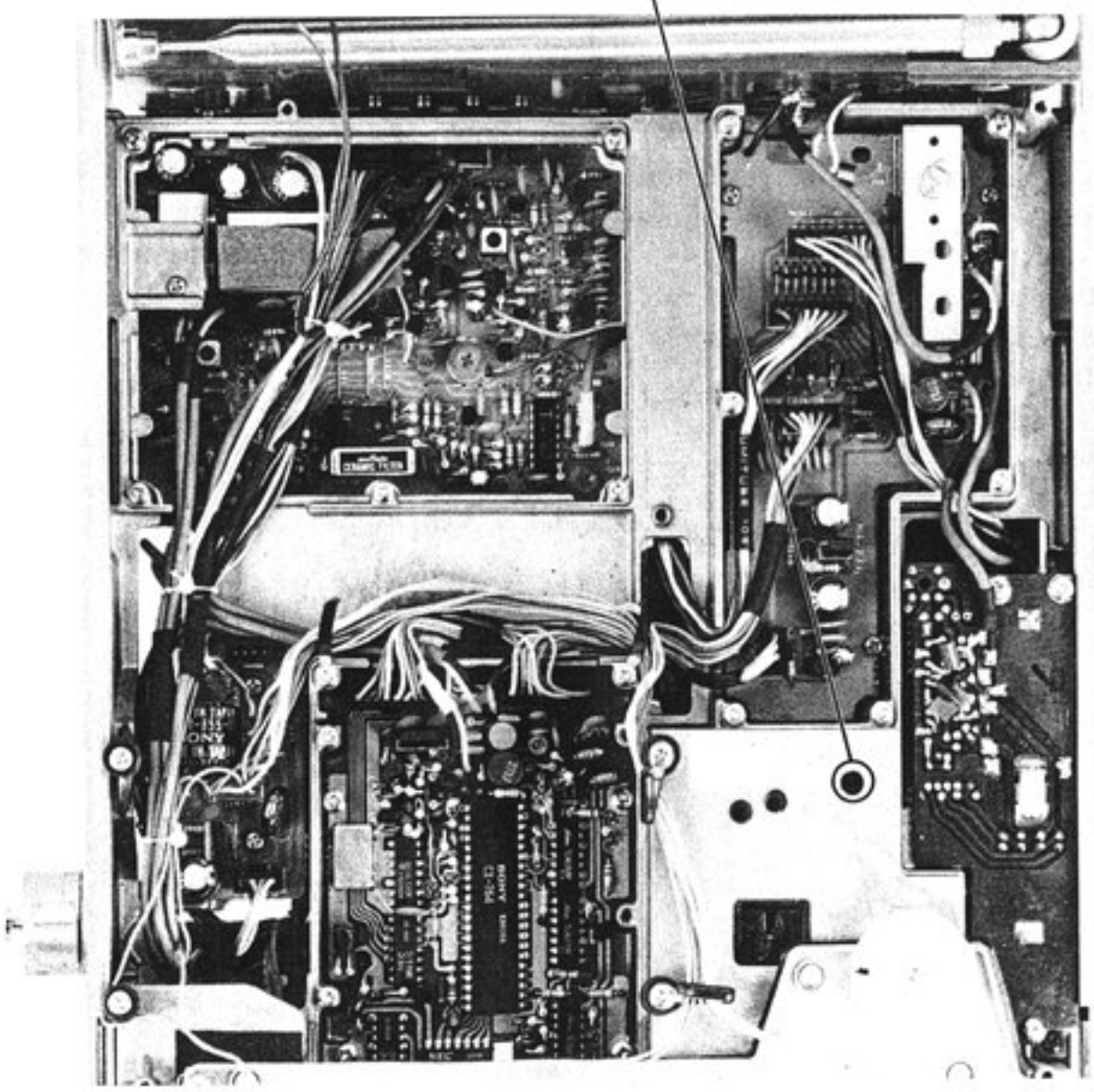

www.shortwaveradio.ch

VCO_2 Adjustment

1. Push in the TUNING knob and turn it fully counterclockwise.
2. Turn and adjust L707 to obtain 2 V voltage at terminal (1) of IC706.
   Specification: 2±0.1 V

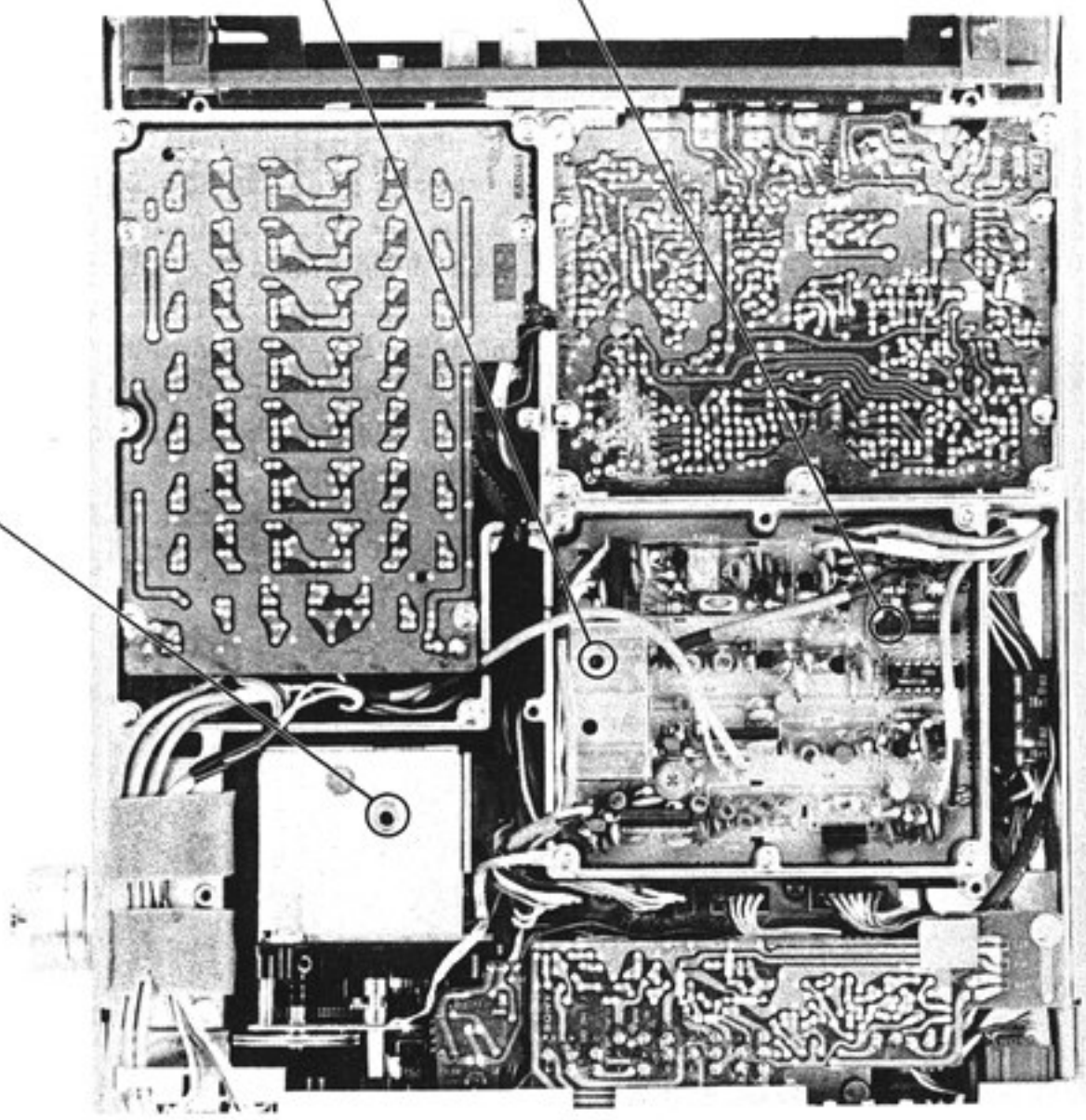

www.shortwaveradio.ch

IF Adjustment 1

- ANTENNA SELECTOR . . . . . EXT ANT
- MODE switch . . . . . NARROW

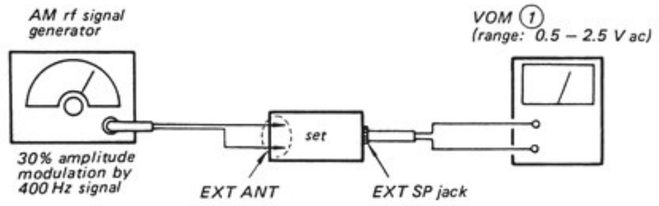

1. Apply a signal from the signal generator and tune in the signal by the TUNING knob. (Apply a signal as weak as possible.)
2. Turn the core of T202 and adjust for the maximum output.
3. Turn T103, 104 and adjust for a clear neat waveform and for the maximum output.
4. Turn T105 for the maximum output.
5. Repeat steps 3 – 4 several times.

IF Adjustment 2

- ANTENNA SELECTOR . . . . . EXT ANT
- MODE SELECTOR . . . . . NARROW
- MGC . . . . . MAX
- PRESELECTOR . . . . . OUT

1. Set the PRESELECTOR to "OUT" and apply 10,050.0 MHz, 10 dBμ signal from the signal generator.
2. Tune in the signal by the TUNING knob.
3. Set the PRESELECTOR to "IN" and turn the preselector to obtain the maximum output.
4. Change the signal to 60 dBμ and obtain 0 dB output level by turning the VOLUME knob.
5. Change the output of SSG to 0 dBμ. Turn VR201 and adjust for –6 dBμ output.
6. Change the output of SSG to 110 dBμ. Turn VR202 and adjust for the point just before the output level drops.

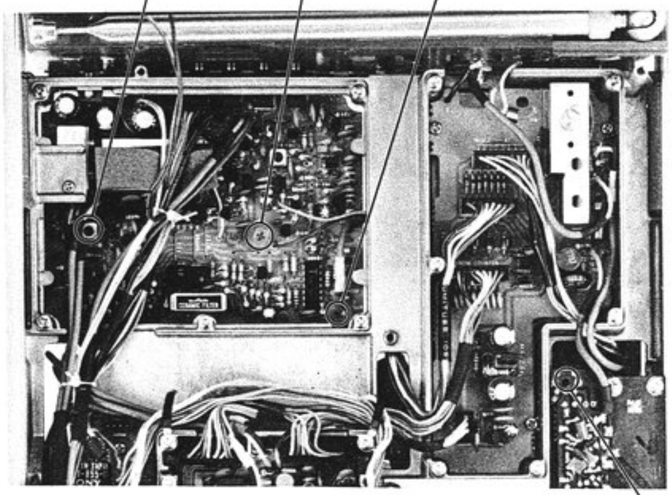

Preselector Adjustment

① ○ ANTENNA SELECTOR . .TELESCOPIC ANT
○ MODE SELECTOR . . . .NARROW
○ PRESELECTOR . . . . . .IN
○ MGC. . . . . .MAX

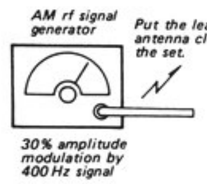

1. Apply 145 kHz signal from the sweep generator.
2. Tune in the signal (145 kHz) by the TUNING knob.
3. Turn the PRESELECTOR knob fully counterclockwise.
4. Adjust the core of L502 for the maximum output.
5. Disconnect the 8 pin connector which is connecting the counter board and the antenna board.

connector from the counter board Ⓐ

connector to the antenna board Ⓑ

6. Apply 410 kHz signal from the sweep generator.
7. Connect terminal 2 of connector Ⓐ and terminal 1 of connector Ⓑ with a lead wire.
8. Tune in 410 kHz signal with the TUNING knob.
9. Turn the PRESELECTOR knob fully clockwise.
10. Adjust CT501 for the maximum output.
11. Repeat steps 1 – 10 and adjust correctly.

② ○ ANTENNA SELECTOR . . . . . EXT ANT
○ MODE SELECTOR . . . . . NARROW
○ PRESELECTOR . . . . . IN
○ MGC . . . . . MAX

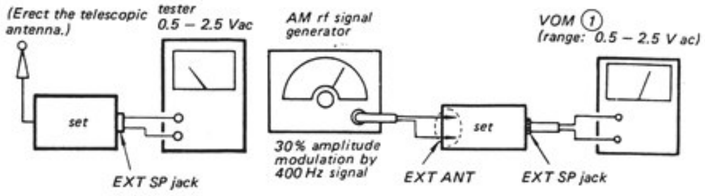

1. Connect terminal 1 of connector Ⓐ and terminal 2 of connector Ⓑ.
2. Apply 385 kHz signal from the sweep generator.
3. Tune in the signal (385 kHz) by turning the TUNING knob.
4. Turn the shaft of the PRESELECTOR fully counterclockwise.
5. Adjust L501-1 for the maximum output.
6. Next, connect terminal 5 of connector Ⓐ and terminal 6 of connector Ⓑ.
7. Apply 3.8 MHz signal from the sweep generator.
8. Tune in 3.8 MHz signal by turning the TUNING knob.
9. Turn the shaft of the PRESELECTOR fully counterclockwise.
10. Adjust L501-2 for the maximum output.

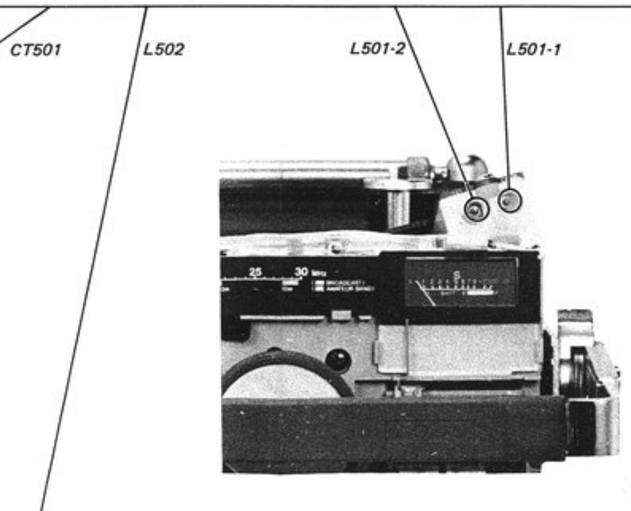

www.shortwaveradio.ch

Replacement Semiconductors

Q101, 102
Q111, 601
Q604, 706 : 2SK43

Q103–108 : 2SK152

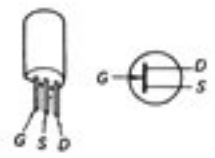

Q109: 2SK58

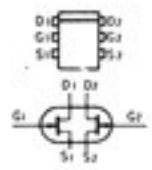

Q110, 115
Q118, 602
Q603, 605
Q703–705
Q709–713
Q801, 803 : 2SC930D

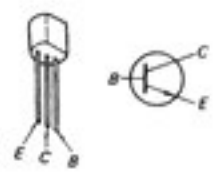

Q112, 119
Q701, 707
Q708 : 2SK42

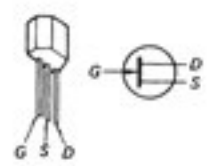

Q113, 114
Q201–204
Q208–214 : 2SC710

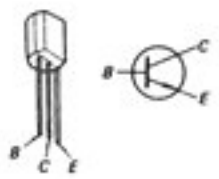

Q116, 117
Q210 : 2SK23

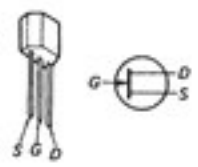

Q120, 121
Q206
Q219, 220
Q409
Q501–508
Q811 : 2SA1026

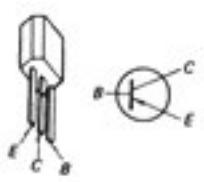

Q122
Q205, 207
Q215–217
Q401–404
Q408
Q509, 510
Q804–806
Q809, 810
Q221 : 2SC1363

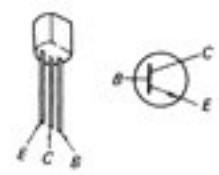

Q406: PS4001

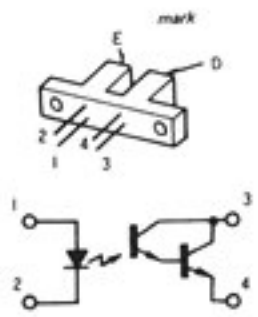

Q407: 2SC1173

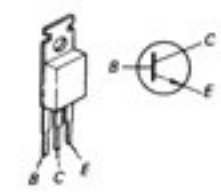

Q702: 2SC668SP

Q802: 2SC641

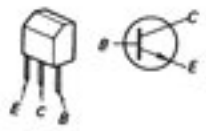

D1–5
D111–113
D807,
D901, 902 : 10E2

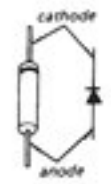

D6–16
D105–108
D501–506 : 1S2222

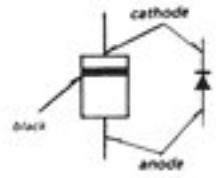

D101–103
D109, 110
D114–116
D201–212
D406, 409
D514–523
D603, 604
D702
D801–806
D814, 815 : 1S1555

D213: VD1221

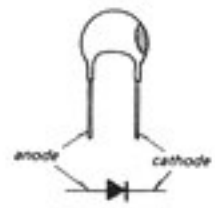

D401–405
D407 : SLP24B

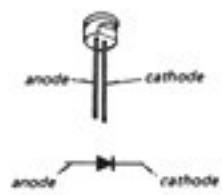

D408: RD9.1E

D601, 602
D701 : 1T25

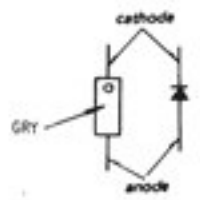

www.shortwaveradio.ch

4-1. MOUNTING DIAGRAM

IC101: LA1222

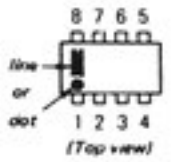

IC202, 701
IC703, 704 : μPC1037

IC203: μPC1154

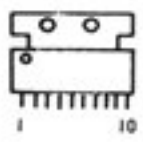

IC204: μPC14305

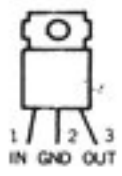

IC501: μPC78L05A

IC702, 801: TA7060

IC705: MB84013M

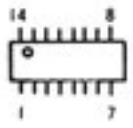

IC706: TC5081P

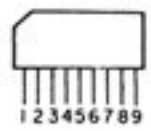

IC802: SN74LS90

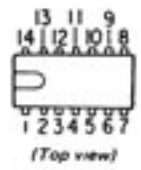

IC803: CX764

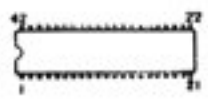

IC804: μPA57C

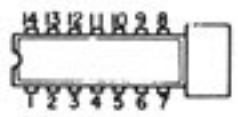

IC805: μPA56C

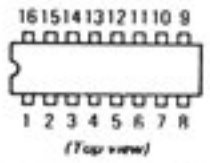

IC201: TA7158
IC806: μPA67C
IC807: TC4001
IC808: TC4011
IC809: TC4030

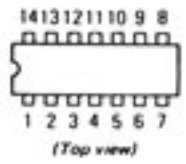

Note:

- Color code of sleeving over the end of the jacket.

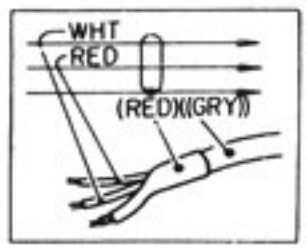

- [ ]← : indicates side identified with part number.
- DC resistance measurements are with coils and transformers connected on the circuit board, and are approximate.
- : B + pattern
- ▬▶▬ : signal path

www.shortwaveradio.ch

SECTION 4
DIAGRAMS

Q · IC		508 507 506 505 504 503 502 501 509 510 IC501
D	2-8 17 1 9	10-16 507-513 518-

【FILTER BOARD】
(CONDUCTOR SIDE)

【ANTENNA BOARD】
(COMPONENT SIDE)

www.shortwaveradio.ch

E F G H I J K

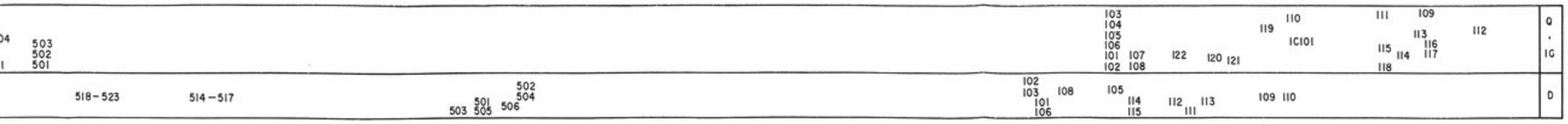

1 2 3 4 5

(11-13)
(11-13)
(11-13, 32)
A SYNTHESIZER BOARD
VCO BOARD
COUNTOR BOARD

【RF BOARD】
(COMPONENT SIDE)

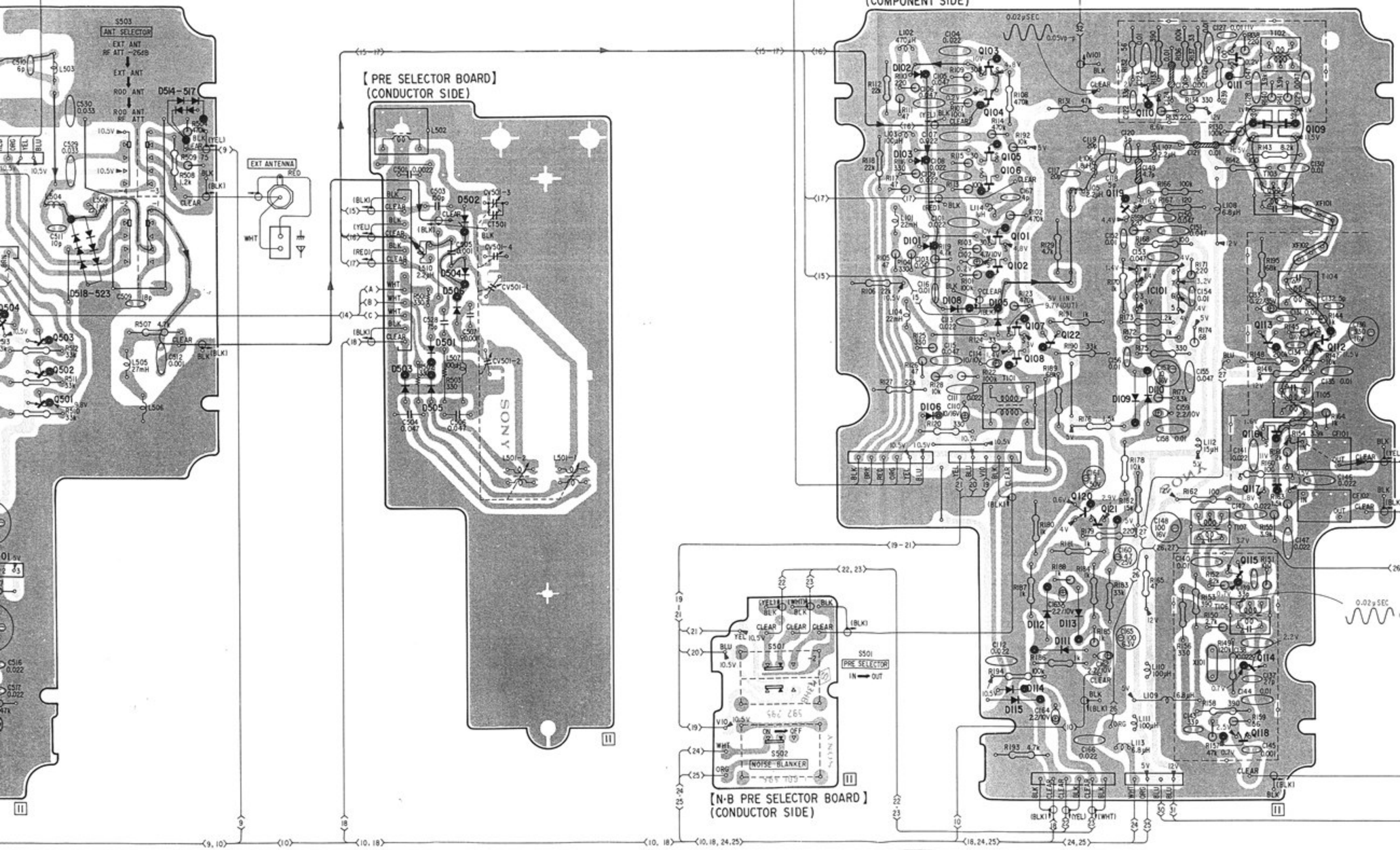

www.shortwaveradio.ch

4-2. MOUNTING DIAGRAM

Note:

- Color code of sleeving over the end of the jacket.

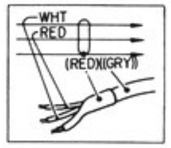

- [⊢]: indicates side identified with part number.
- ⊘ : Through hole.
- DC resistance measurements are with coils and transformers connected on the circuit board, and are approximate.
- : B + pattern
- : signal path
- ⊗—⊗ : component-side pattern.

【IF-AF BOARD】 (CONDUCTOR SIDE)

【SYNTHESIZER BOARD】 (COMPONENT SIDE)

【CONNECTION BOARD】 (COMPONENT SIDE)

【PHOTO DET BOARD】 (CONDUCTOR SIDE)

【MODE A BOARD】 (COMPONENT SIDE)

【HEAD PHONE BOARD】 (CONDUCTOR SIDE)

【POWER SWITCH BOA (CONDUCTOR SIDE)

【MICRO SWITCH BOARD】 (CONDUCTOR SIDE)

IF-AF BOARD Q, IC	D
IC204	
203	
204	
221	
220	
219	
IC203	
214	
202,213	213
216	
205,215	
201,206	
IC202	
217	209
207	210
	212
	202
212	201
	211
208	205
211	203
IC201	207,204
209	
210	206
	208

	Q	D
CONNECTION BOARD	Q407	D408
PHOTO DET BOARD	Q406	D409
MODE A BOARD		D405 D404 D403 D402 D401

www.shortwaveradio.ch

H I J K L M N O

1 2 3 4 5

SYNTHESIZER BOARD

Q,IC	D
705	
IC703	
704	
703	
711	
IC706	701
709	
710	
IC705	
706	
	702
IC704	
713	
712	
708	
707	
701	
IC701	
IC702	
702	

【VFO BOARD】
(CONDUCTOR SIDE)

VFO BOARD

Q	D
	604
	602
604	
605	

【VCO BOARD】
(CONDUCTOR SIDE)

VCO BOARD

Q	D
	601
	603
601	
602	
603	

COUNTER BOARD

Q,IC	D
810	
IC801	
801	
803	805
	806
802	
	803
IC809	801
IC802	
IC803	
	814
IC808	
808	
805,804	
IC806	
806	
807	
809	
	815
	802
IC807	807
IC805	804
IC804	
811	

【POWER BOARD】
(CONDUCTOR SIDE)
(AC ADAPTOR)

【COUNTER BOARD】
(COMPONENT SIDE)

【LED BOARD】
(CONDUCTOR SIDE)

LED BOARD

D						
	808	809	810	811	812	813

MODE B BOARD

Q						
D	Q409	Q402	Q401	Q405	Q403	Q404
		D406		Q408		

【MODE B BOARD】
(CONDUCTOR SIDE)

【POWER SWITCH BOARD】
(CONDUCTOR SIDE)

www.shortwaveradio.ch

4-3. SCHEMATIC DIAGRAM

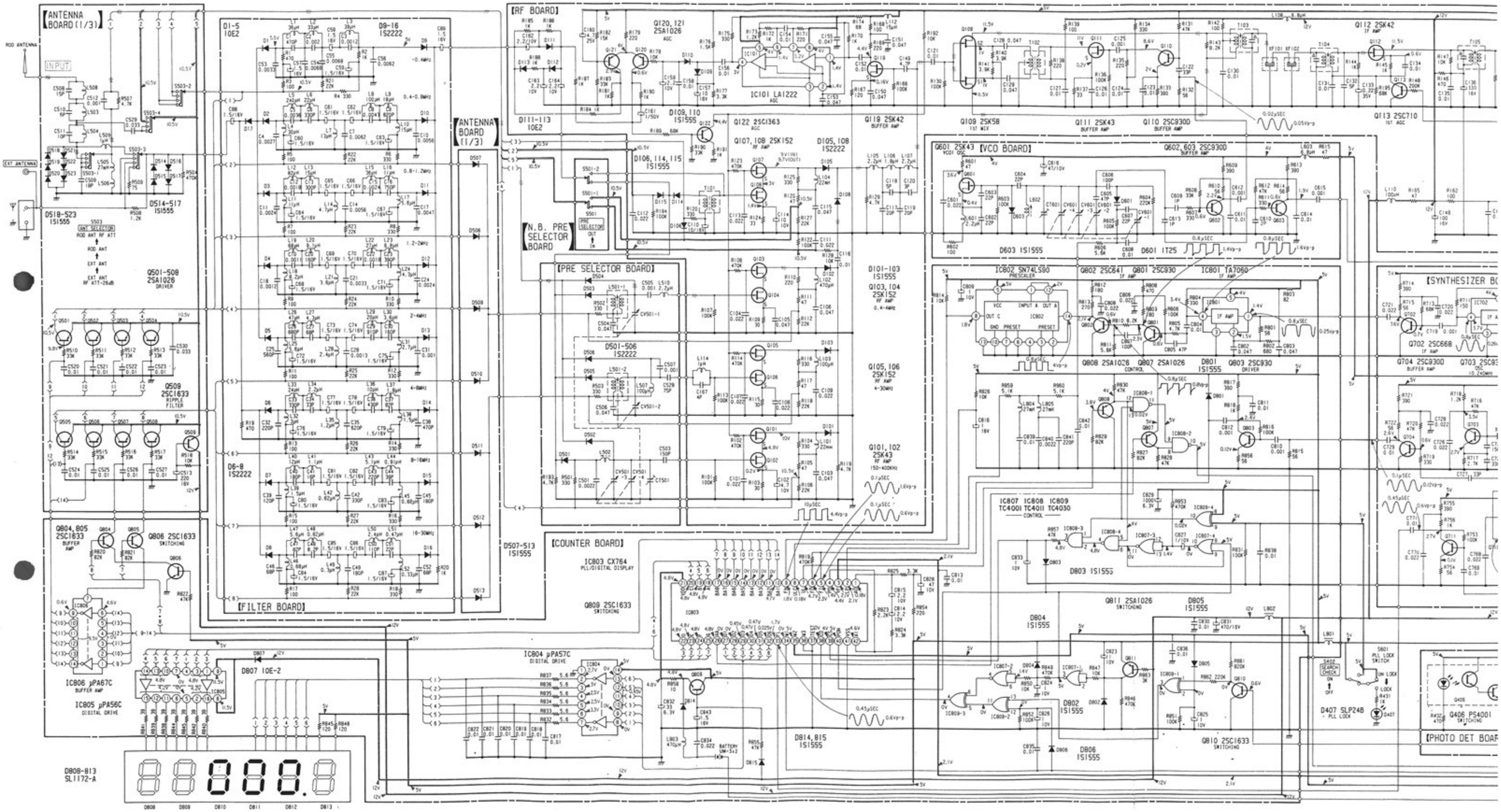

www.shortwaveradio.ch

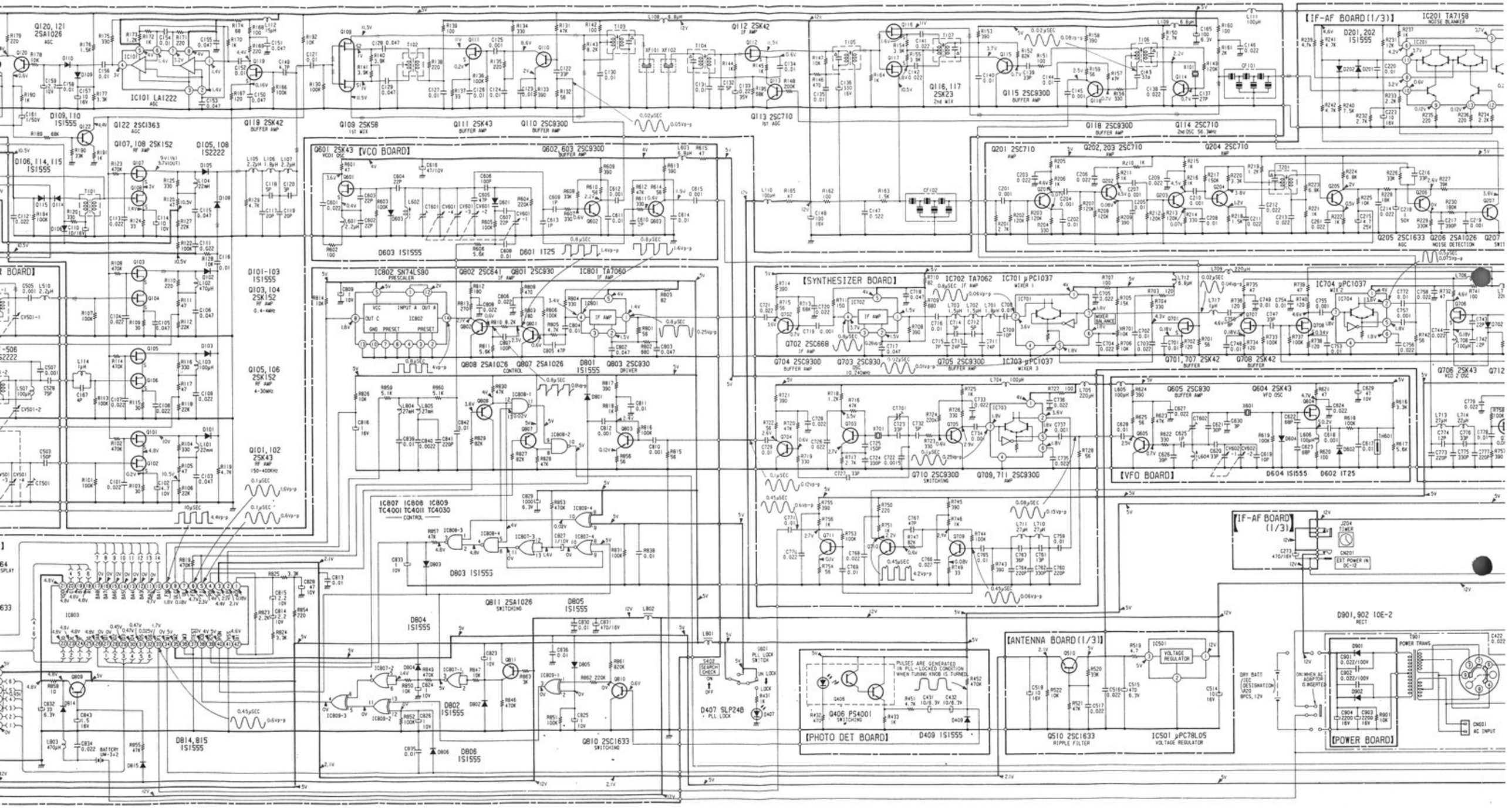

www.shortwaveradio.ch

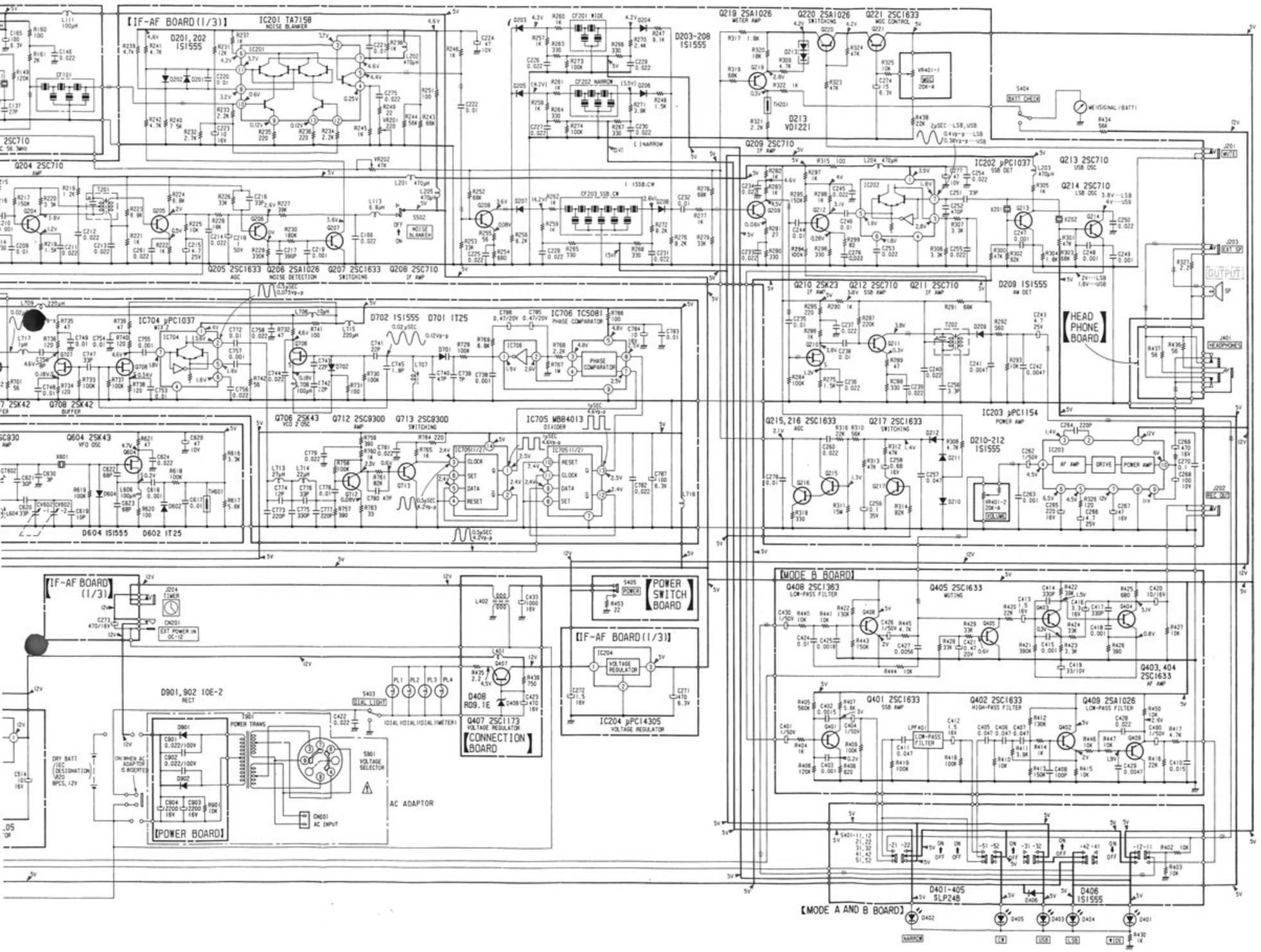

Note:

- All capacitors are in μF unless otherwise noted. pF : μμF 50WV or less are not indicated except for electrolytics and tantalums.
- All resistors are in ohms, ¼ W unless otherwise noted. kΩ : 1000 Ω, MΩ : 1000 kΩ
- △ : internal component.
- ⇒ : signal path
- ▭ : panel designation.
- ▭ : adjustment for repair.
- ——: B+ bus.
- Voltages are dc with respect to ground unless otherwise noted.
- Readings are taken under no-signal (detuned) conditions with a VOM (20 kΩ/V).

  [ ] : NARROW

  ( ) : SSB. CW
- Voltage variations may be noted due to normal production tolerances.
- Switch

Ref. No.	Switch	Position
S401	MODE	WIDE
S402	SEARCH	OFF
S403	DIAL LIGHT	OFF
S404	BATT METER	METER
S405	POWER	ON
S501	PRE SELECTOR	IN
S502	NOISE BLANKER	ON
S503	ANT SELECTOR	RF ATT –26 dB
S601	PLL LOCK	RELEASED
S901	VOLTAGE SELECTOR	100 V

Note: The components identified by shading and mark ⚠ are critical for safety. Replace only with part number specified.

www.shortwaveradio.ch

SECTION 5
EXPLODED VIEWS

Note:

- Items marked "★" are not stocked since they are seldom required for routine service. Some delay should be anticipated when ordering these items.
- All screws are Phillips (cross recess) type unless otherwise noted.
  (-) = slotted head
- (□□T) shows the number of coils in spring.

Note: The components identified by shading and mark ⚠ are critical for safety. Replace only with part number specified.

(1)

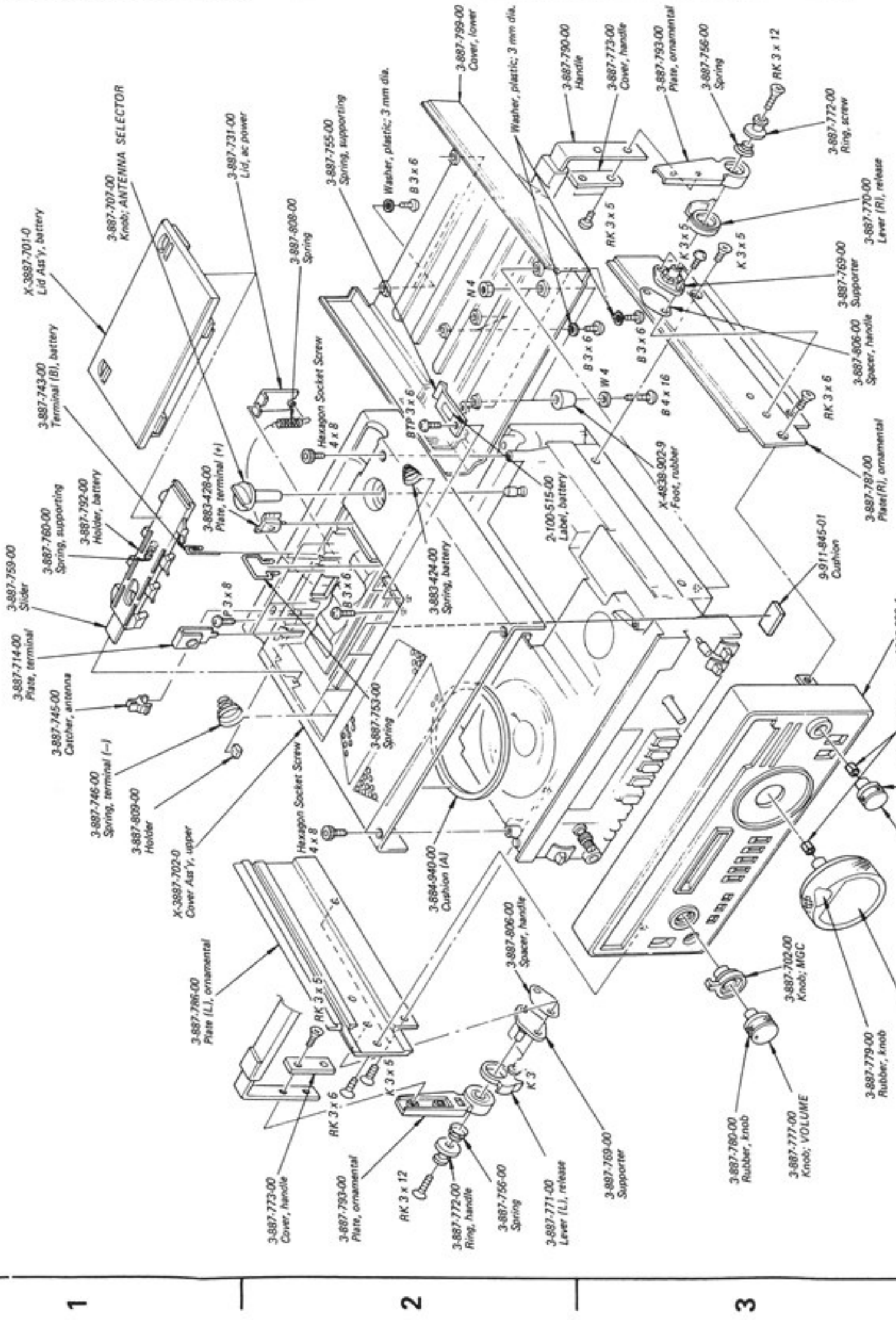

www.shortwaveradio.ch

A B C D E

1 2 3

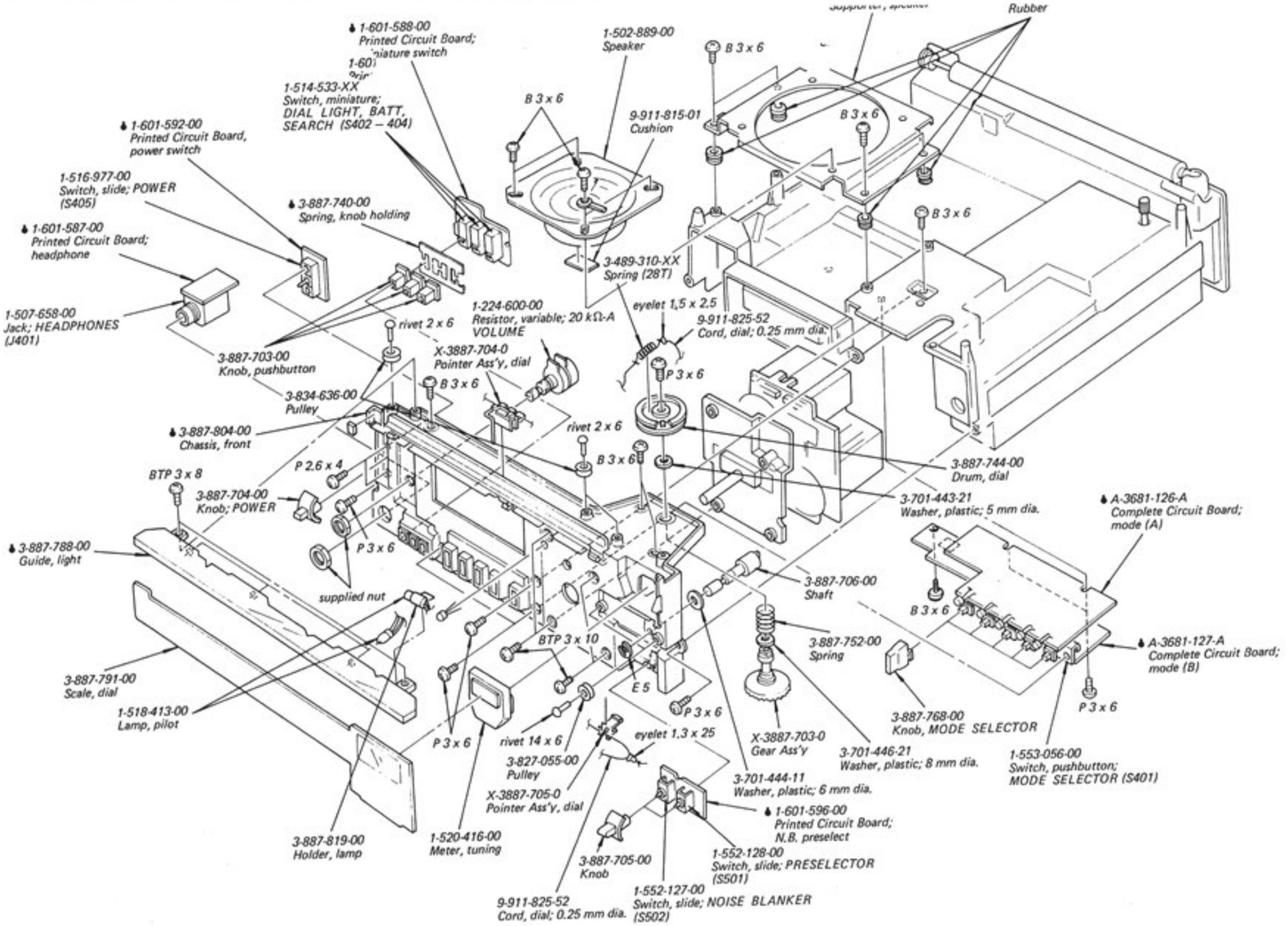

www.shortwaveradio.ch

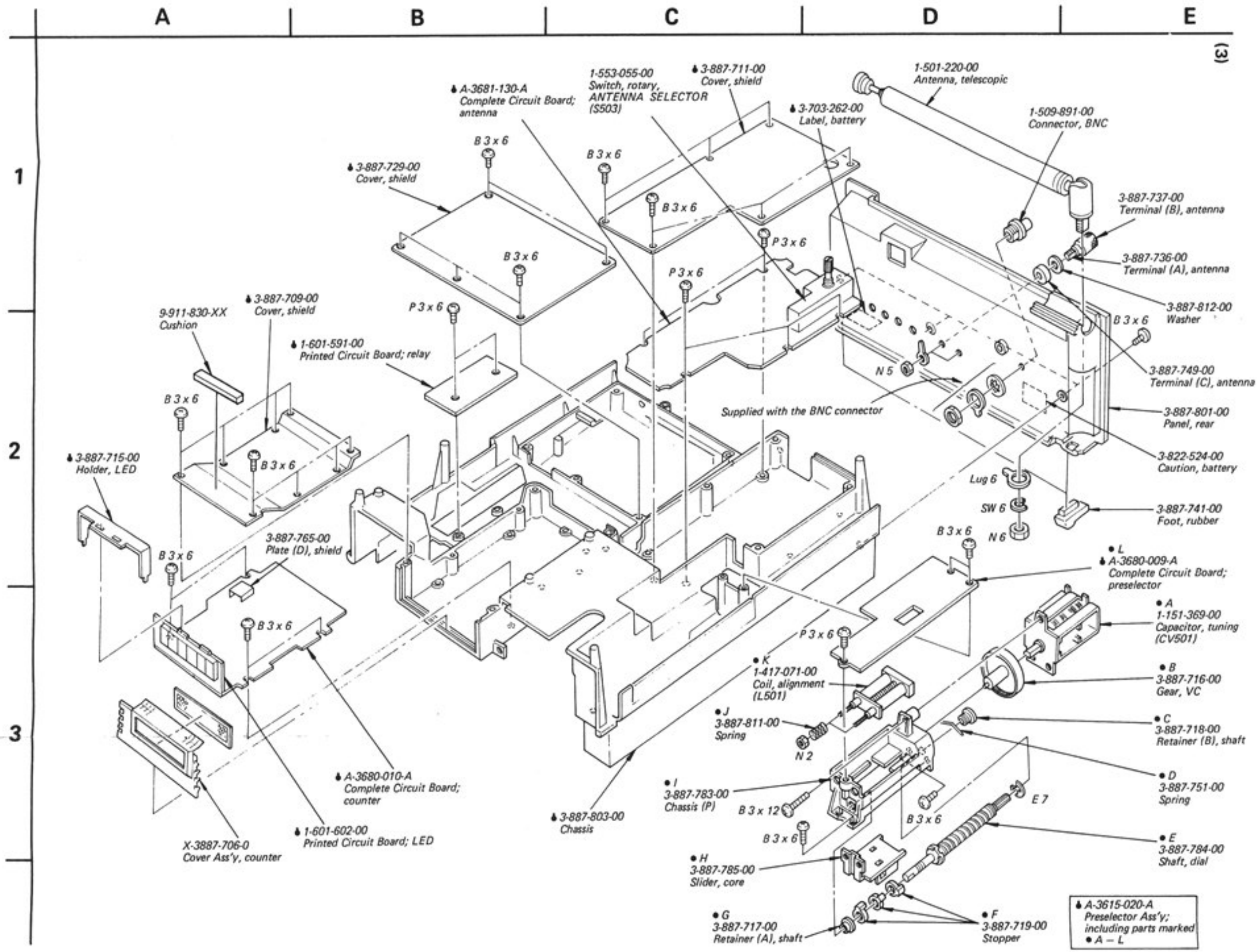

www.shortwaveradio.ch

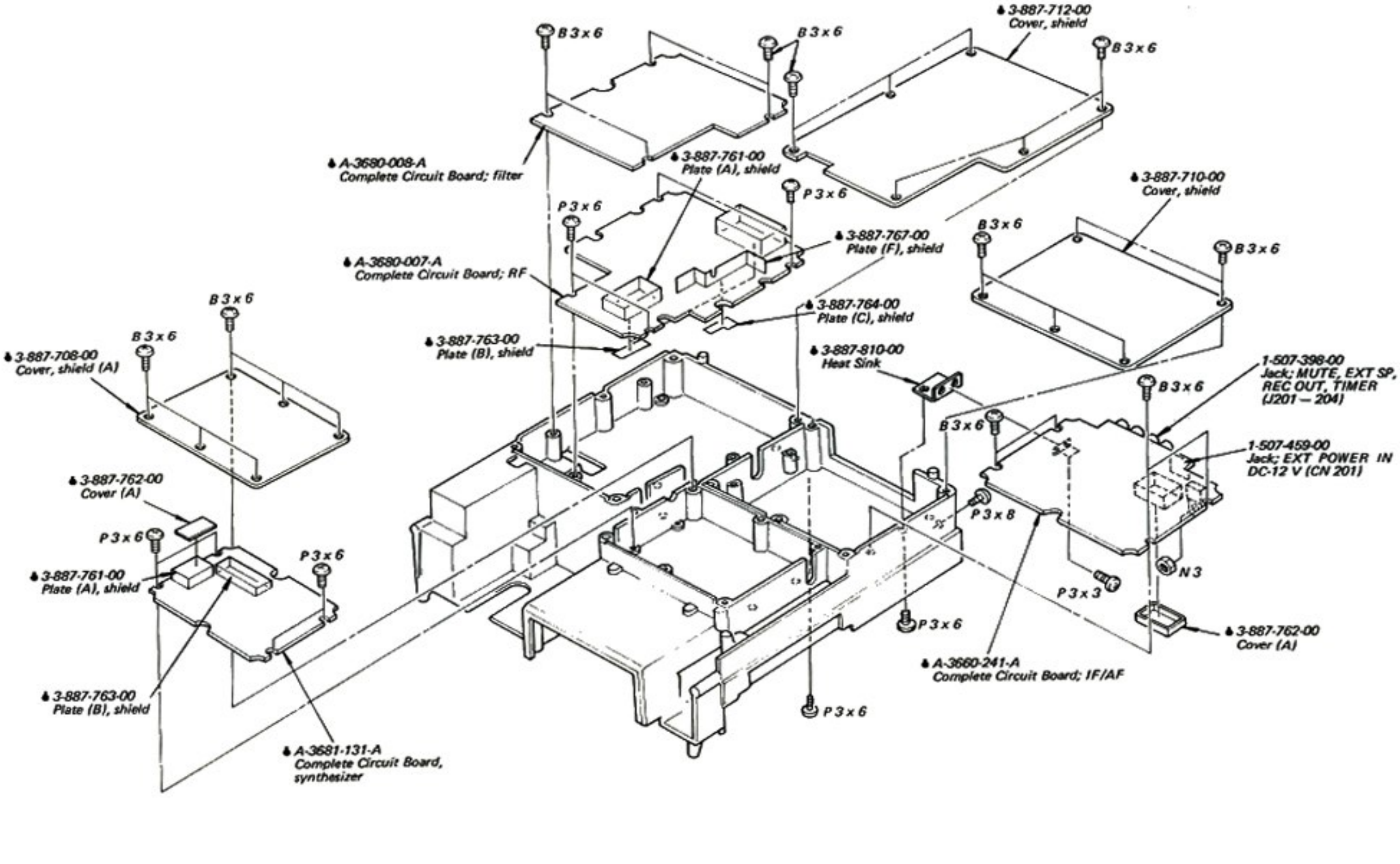

www.shortwaveradio.ch

www.shortwaveradio.ch

www.shortwaveradio.ch

SECTION 6
ELECTRICAL PARTS LIST

- Items marked "•" are not stocked since they are seldom required for routine service. Some delay should be anticipated when ordering these items.

Note: The components identified by shading and mark ⚠ are critical for safety. Replace only with part number specified.

Ref. No.	*Part No.*	*Description*
	SEMICONDUCTORS	
	Transistors	
Q101, 102	8-723-304-00	2SK43-4
Q103–108	8-765-422-00	2SK152-2
Q109	8-761-510-06	2SK58
Q110	8-729-803-04	2SC930
Q111	8-723-304-00	2SK43-4
Q112	8-727-313-00	2SK42-3
Q113, 114	8-729-671-13	2SC710-13
Q115	8-729-803-04	2SC930
Q116, 117	8-722-384-01	2SK23A-840 (BLU)
Q118	8-729-803-04	2SC930
Q119	8-727-313-00	2SK42-3
Q120, 121	8-729-612-77	2SA1027R
Q122	8-729-663-47	2SC1364
Q201–204	8-729-671-13	2SC710-13
Q205	8-729-663-47	2SC1364
Q206	8-729-612-77	2SA1027R
Q207	8-729-663-47	2SC1364
Q208, 209	8-729-671-13	2SC710-13
Q210	8-722-384-01	2SK23A-840 (BLU)
Q211–214	8-729-671-13	2SC710-13
Q215–217	8-729-663-47	2SC1364
Q219, 220	8-729-612-77	2SA1027R
Q221	8-729-663-47	2SC1364
Q401–405	8-729-663-47	2SC1364
Q406	8-719-140-01	PS4001
Q407	8-729-217-33	2SC1173
Q408	8-729-663-47	2SC1364
Q409, Q501–508	8-729-612-77	2SA1027R
Q509, 510	8-729-663-47	2SC1364
Q601	8-723-304-00	2SK43-4
Q602, 603	8-729-803-04	2SC930
Q604	8-723-304-00	2SK43-4
Q605	8-729-803-04	2SC930
Q701	8-727-313-00	2SK42-3
Q702	8-729-806-84	2SC668
Q703–705	8-729-803-04	2SC930
Q706	8-723-304-00	2SK43-4
Q707, 708	8-727-313-00	2SK42-3
Q709–713	8-729-803-04	2SC930
Q801	8-729-803-04	2SC930
Q802	8-729-364-12	2SC641K
Q803	8-729-803-04	2SC930
Q804–806	8-729-663-47	2SC1364
Q807, 808	8-729-612-77	2SA1027R
Q809, 810	8-729-663-47	2SC1364
Q811	8-729-612-77	2SA1027R
	ICs	
IC101	8-759-812-22	LA1222
IC201	8-759-271-58	TA7158P
IC202	8-759-110-37	μPC1037H
IC203	8-759-111-54	μPC1154H
IC204	8-759-143-05	μPC14305H
IC501	8-759-108-05	μPC78L05A
IC701	8-759-110-37	μPC1037H
IC702	8-759-270-60	TA7060P
IC703, 704	8-759-110-37	μPC1037H
IC705	8-759-984-13	MB84013M
IC706	8-759-250-81	TC5081P
IC801	8-759-270-60	TA7060P
IC802	8-759-900-90	SN74LS90N
IC803	8-759-107-64	CX-764
IC804	8-759-100-57	μPA57C
IC805	8-759-100-56	μPA56C
IC806	8-759-100-67	μPA67C
IC807	8-759-240-01	TC4001BP
IC808	8-759-240-11	TC4011BP
IC809	8-759-240-30	TC4030BP
	Diodes	
D1–5	8-719-200-02	10E2
D6–16	8-719-100-02	1S2222
D101–103	8-719-815-55	1S1555

www.shortwaveradio.ch

Ref. No.	*Part No.*	*Description*
D105	8-719-100-02	1S2222
D106	8-719-815-55	1S1555
D108	8-719-100-02	1S2222
D109, 110	8-719-815-55	1S1555
D111–113	8-719-200-02	10E2
D114	8-719-100-02	1S2222
D115 D201–212)	8-719-815-55	1S1555
D213	8-719-122-10	VD1221
D401–405	8-719-900-24	SLP24B
D406	8-719-815-55	1S1555
D407	8-719-900-24	SLP24B
D408	8-719-191-07	RD9.1E
D409	8-719-815-55	1S1555
D501–506	8-719-100-02	1S2222
D507–523	8-719-815-55	1S1555
D601, 602	8-712-500-00	1T25
D603, 604	8-719-815-55	1S1555
D701	8-712-500-00	1T25
D702 D801–806)	8-719-815-55	1S1555
D807	8-719-200-02	10E2
D808–813	8-719-917-22	SL1172
D814, 815	8-719-815-55	1S1555
D901, 902	8-719-200-02	10E2

CAPACITORS

Common capacitors are omitted. Refer to the lists on page 51 and 52 for their part numbers.

RESISTORS

Common ¼ W carbon resistors are omitted. Refer to the list on page 53 for their part numbers.

MISCELLANEOUS

CF101	1-527-392-00	Ceramic Filter
CF102	1-527-391-00	Ceramic Filter
CF201	1-527-390-00	Ceramic Filter
CF202	1-527-569-00	Ceramic Filter
CF203	1-527-568-00	Ceramic Filter
CN201	1-507-459-00	Jack, EXT POWER IN DC 12 V
CT601, 602	1-141-229-00	Trimmer
CT701	1-141-171-00	Trimmer
CV501	1-151-369-00	Capacitor, tuning
CV601	1-151-328-00	Capacitor, tuning
CV602	1-151-220-00	Capacitor, tuning
J201–204	1-507-398-00	Jack; MUTE, EXT SP, REC OUT, TIMER
J401	1-507-658-00	Jack; HEADPHONES
L001	1-408-069-00	3.6 μH micro inductor
L002	1-408-068-00	33 μH micro inductor
L003	1-408-070-00	39 μH micro inductor
L004	1-408-347-00	30 μH inductor
L005	1-408-089-00	240 μH micro inductor
L006	1-408-121-00	22 μH micro inductor
L007	1-408-344-00	13 μH inductor
L008	1-408-080-00	100 μH micro inductor
L009	1-408-120-00	18 μH micro inductor
L010	1-408-119-00	15 μH micro inductor
L011	1-408-343-00	11 μH inductor
L012	1-408-078-00	82 μH micro inductor
L013	1-408-119-00	15 μH micro inductor
L014	1-408-113-00	4.7 μH micro inductor
L015	1-408-069-00	36 μH micro inductor
L016	1-408-343-00	11 μH inductor
L017	1-408-114-00	5.6 μH micro inductor
L018	1-408-116-00	8.2 μH micro inductor
L019	1-408-076-00	68 μH micro inductor
L020	1-408-342-00	9.1 μH inductor
L021	1-408-339-00	3.6 μH inductor
L022	1-408-122-00	27 μH micro inductor
L023	1-408-115-00	6.8 μH micro inductor
L024	1-408-340-00	4.3 μH inductor
L025	1-408-114-00	5.6 μH micro inductor
L026	1-408-072-00	47 μH micro inductor
L027	1-408-340-00	4.3 μH inductor
L028	1-408-337-00	2.4 μH inductor
L029	1-408-345-00	20 μH inductor
L030	1-408-339-00	3.6 μH inductor

www.shortwaveradio.ch

Ref. No.	Part No.	Description
L031	1-408-110-00	2.7 μH micro inductor
L032	1-408-338-00	3 μH inductor
L033	1-408-346-00	24 μH inductor
L034	1-408-109-00	2.2 μH micro inductor
L035	1-408-106-00	1.2 μH micro inductor
L036	1-408-117-00	10 μH micro inductor
L037	1-408-108-00	1.8 μH micro inductor
L038, 039	1-408-107-00	1.5 μH micro inductor
L040	1-408-118-00	12 μH micro inductor
L041	1-408-336-00	1.1 μH inductor
L042	1-408-333-00	0.62 μH inductor
L043	1-408-341-00	5.1 μH inductor
L044	1-408-335-00	0.91 μH inductor
L045, 046	1-408-334-00	0.68 μH inductor
L047	1-408-114-00	5.6 μH micro inductor
L048	1-408-333-00	0.62 μH inductor
L049	1-408-330-00	0.3 μH inductor
L050	1-408-337-00	2.4 μH inductor
L051	1-408-332-00	0.47 μH inductor
L052	1-408-331-00	0.33 μH inductor
L101	1-407-210-XX	22 mH micro inductor
L102	1-407-177-XX	470 μH micro inductor
L103	1-407-169-XX	100 μH micro inductor
L104	1-407-210-XX	22 mH micro inductor
L105	1-407-182-XX	2.2 μH micro inductor
L106	1-407-181-XX	1.8 μH micro inductor
L107	1-407-182-XX	2.2 μH micro inductor
L108, 109	1-408-115-00	6.8 μH micro inductor
L110, 111	1-407-169-XX	100 μH micro inductor
L112	1-407-159-XX	15 μH micro inductor
L113	1-407-188-XX	6.8 μH micro inductor
L114	1-407-178-XX	1 μH micro inductor
L201	1-408-096-XX	470 μH micro inductor
L202–205	1-407-177-00	470 μH micro inductor
L401	1-407-856-00	Choke Coil
L402	1-441-855-00	Transformer, heat insulation
L501	1-417-071-00	Coil, alignment
L502	1-401-846-00	Coil, LW antenna
L503	1-425-796-00	Coil, high frequency transformer (FM)
♦L504	1-401-495-11	Loading Antenna Coil
L505	1-407-878-00	27 mH micro inductor
L506	1-407-856-00	Choke Coil
L507	1-408-080-00	100 μH micro inductor
♦L508	1-401-495-11	Loading Antenna Coil
L509	1-407-178-XX	1 μH micro inductor
L510, L601	1-407-182-XX	2.2 μH micro inductor
L602	1-405-877-00	Coil, oscillator
L603	1-407-188-XX	6.8 μH micro inductor
L604	1-405-897-00	Coil, oscillator
L605, 606	1-407-169-XX	100 μH micro inductor
L701	1-407-181-XX	1.8 μH micro inductor
L702, 703	1-407-180-XX	1.5 μH micro inductor
L704	1-408-080-00	100 μH micro inductor
L705	1-407-173-XX	220 μH micro inductor
L706	1-407-157-XX	10 μH micro inductor
L707	1-405-722-00	Coil
L708	1-407-169-XX	100 μH micro inductor
L709	1-407-173-XX	220 μH micro inductor
L710, 711	1-407-162-XX	27 μH micro inductor
L712	1-407-188-XX	6.8 μH micro inductor
L713	1-407-162-XX	27 μH micro inductor
L714	1-407-161-XX	22 μH micro inductor
L715	1-407-173-XX	220 μH micro inductor
L716	1-407-856-00	Choke Coil
L717	1-407-178-XX	1 μH micro inductor
L801, 802	1-407-856-00	Choke Coil
L803	1-407-177-XX	470 μH micro inductor
L804	1-407-878-00	27 mH micro inductor
L805	1-408-222-00	27 mH micro inductor
L806	1-407-856-00	Choke Coil
LF401	1-231-660-00	Filter, active
S401	1-553-056-00	Switch, pushbutton; MODE SELECTOR
S402–404	1-514-533-XX	Switch, miniature; DIAL LIGHT, BATT, SEARCH

www.shortwaveradio.ch

Ref. No.	*Part No.*	*Description*
S405	1-516-977-00	Switch, slide; POWER
S501	1-552-128-00	Switch, slide; PRESELECTOR
S502	1-552-127-00	Switch, slide; NOISE BLANKER
S503	1-553-055-00	Switch, rotary; ANTENNA SELECTOR
⚠S901	1-552-026-00	Selector, voltage
T101	1-401-816-00	Coil, antenna
T102	1-425-912-00	Coil, balanced mixer
T103	1-404-239-00	Coil, IF
T104, 105	1-404-222-00	Coil, IF
T106, 107	1-405-878-00	Coil, oscillator
T201, 202	1-403-152-00	IFT (AM)
⚠T901	1-446-598-00	Transformer, power
TH201, 601	1-800-202-XX	Thermistor (S-10K)
VR201	1-224-550-21	220 Ω-B adjustable
VR202	1-224-254-XX	47 kΩ-B adjustable
VR701	1-224-252-XX	10 kΩ-B adjustable
X101	1-527-540-00	Radiator, crystal
X201	1-527-270-00	Crystal Oscillator
X202	1-527-271-00	Crystal Oscillator
X601	1-527-389-00	Crystal, lithium tantalate
X701	1-527-293-00	Crystal
XF101, 102	1-527-372-00	Filter, crystal
	1-224-600-00	Resistor, variable; 20 kΩ-A, VOLUME
	1-501-220-00	Antenna, telescopic
	1-502-889-00	Speaker
	⚠1-509-510-00	Connector, 2P power (AEP, E model)
	1-509-891-00	Connector, BNC
	1-516-325-00	Switch, miniature
	1-518-413-00	Lamp, pilot
	1-520-416-00	Meter, tuning
	⚠1-561-052-00	Connector, 2 P power (US model)

Ref. No.	*Part No.*	*Description*
	COMPLETE CIRCUIT BOARDS	
	♦A-3660-241-A	IF/AF
	♦A-3680-005-A	VCO
	♦A-3680-006-A	VFO
	♦A-3680-007-A	RF
	♦A-3680-008-A	Filter
	♦A-3680-009-A	Preselector
	♦A-3680-010-A	Counter
	♦A-3681-126-A	Mode (A)
	♦A-3681-127-A	Mode (B)
	♦A-3681-130-A	Antenna
	♦A-3681-131-A	Synthesizer
	PRINTED CIRCUIT BOARDS	
	♦1-601-587-00	Headphone
	♦1-601-588-00	Miniature Switch
	♦1-601-589-00	Photo Detection
	♦1-601-591-00	Relay
	♦1-601-592-00	Power Switch
	♦1-601-602-00	LED
	♦1-601-603-00	Power

ACCESSORIES & PACKING MATERIALS

Part No.	*Description*
⚠1-534-840-XX	Cord, power (AEP, E model)
⚠1-551-379-00	Cord, power (US model)
3-887-817-00	Carton, individual
3-887-818-00	Cushion
3-887-823-00	Spacer (A)
3-887-824-00	Spacer (B)
3-887-825-00	Sheet, protection
3-887-828-00	Spacer
3-887-829-00	Sheet, spacer
3-887-830-00	Bag, protection
3-887-831-00	Sheet, caution
3-993-227-01	Tag, caution, carrying handle
3-995-874-01	Manual, instruction

www.shortwaveradio.ch

ELECTROLYTIC CAPACITORS

RATING → : Use the high voltage rated one.

CAP. (μF)	6.3 VOLT. PART No.	10 VOLT. PART No.	16 VOLT. PART No.	25 VOLT. PART No.	35 VOLT. PART No.	50 VOLT. PART No.
0.47					→	1-121-726-00
1.0					→	1-121-391-00
2.2					→	1-121-450-00
3.3	→	→	→	1-121-392-00	→	1-121-393-00
4.7	→	→	→	1-121-395-00	→	1-121-396-00
10	→	→	1-121-651-00	1-121-398-00	→	1-121-738-00
22	→	→	1-121-479-00	1-121-480-00	1-121-662-00	1-121-152-00
33	→	→	1-121-403-00	1-121-404-00	1-121-652-00	1-121-405-00
47	→	1-121-352-00	1-121-409-00	1-121-410-00	1-121-653-00	1-121-411-00
100	→	1-121-414-00	1-121-415-00	1-121-416-00	1-121-357-00	1-121-417-00
220	1-121-419-00	1-121-420-00	1-121-421-00	1-121-422-00	1-121-261-00	1-121-423-00
330	1-121-751-00	1-121-805-00	1-121-521-00	1-121-654-00	1-121-655-00	1-121-656-00
470	1-121-424-00	1-121-425-00	1-121-426-00	1-121-733-00	1-121-361-00	1-121-810-00
1000	–	1-121-736-00	1-121-245-00	1-121-657-00	1-121-388-00	1-123-061-00
2200	1-121-658-00	1-121-659-00	1-121-660-00	1-123-067-00	1-121-984-00	–
3300	1-121-661-00	1-123-075-00	1-123-071-00	–	–	–

CAP. (μF)	100 VOLT. PART No.	160 VOLT. PART No.	250 VOLT. PART No.	350 VOLT. PART No.
0.47	–	–	–	–
1.0	1-123-249-00	1-123-252-00	1-123-003-00	1-121-168-00
2.2	1-123-250-00	1-123-026-00	–	1-123-028-00
3.3	1-121-995-00	–	1-123-004-00	1-123-006-00
4.7	1-123-255-00	1-121-246-00	1-121-759-00	1-123-007-00
10	1-121-126-00	1-121-999-00	1-123-254-00	1-123-008-00
22	1-121-996-00	1-123-253-00	1-123-005-00	1-123-022-00
33	1-121-997-00	1-121-757-00	–	–
47	1-123-251-00	1-121-919-00	–	–
100	1-123-084-00	–	–	–

CERAMIC CAPACITORS

RATING

CAP. (pF)	50 VOLT. PART No.	CAP. (pF)	50 VOLT. PART No.	CAP. (pF)	50 VOLT. PART No.	CAP. (μF)	50 VOLT. PART No.
0.5	1-101-837-00	22	1-102-959-00	150	1-101-361-00	0.001	1-102-074-00
0.75	1-101-586-00	24	1-102-960-00	160	1-101-367-00	0.0012	1-102-118-00
1.0	1-102-934-00	27	1-102-961-00	180	1-102-976-00	0.0015	1-102-119-00
1.5	1-101-576-00	30	1-102-962-00	200	1-102-977-00	0.0018	1-102-120-00
2.0	1-102-935-00	33	1-102-963-00	220	1-102-978-00	0.0022	1-102-121-00
3	1-102-936-00	36	1-102-964-00	240	1-102-979-00	0.0027	1-102-122-00
4	1-102-937-00	39	1-102-965-00	270	1-102-980-00	0.0033	1-102-123-00
5	1-102-942-00	43	1-102-966-00	300	1-102-981-00	0.0039	1-102-124-00
6	1-102-943-00	47	1-101-880-00	330	1-102-820-00	0.0047	1-102-125-00
7	1-102-944-00	51	1-101-882-00	360	1-102-821-00	0.0056	1-102-126-00
8	1-102-945-00	56	1-101-884-00	390	1-102-822-00	0.0068	1-102-127-00
9	1-102-946-00	62	1-101-886-00	430	1-102-823-00	0.0082	1-102-128-00
10	1-102-947-00	68	1-101-888-00	470	1-102-824-00	0.01	1-102-129-00
11	1-102-948-00	75	1-101-890-00	510	1-101-059-00	0.022	1-101-005-00
12	1-102-949-00	82	1-102-971-00	560	1-102-115-00	0.047	1-101-006-00
13	1-102-950-00	91	1-102-972-00	680	1-102-116-00		
15	1-102-951-00	100	1-102-973-00	820	1-102-117-00		
16	1-102-952-00	110	1-102-815-00				
18	1-102-953-00	120	1-102-816-00				
20	1-102-958-00	130	1-101-081-00				

0.001μF = 1,000pF

CERAMIC (SEMICONDUCTOR) CAPACITORS

RATING → : Use the high voltage rated one.

CAP. (μF)	25 VOLT. PART No.	50 VOLT. PART No.	CAP. (μF)	25 VOLT. PART No.	50 VOLT. PART No.
0.001	→	1-161-039-00	0.018	1-161-016-00	1-161-054-00
0.0012	→	1-161-040-00	0.022	1-161-017-00	1-161-055-00
0.0015		1-161-041-00	0.027	1-161-018-00	1-161-056-00
0.0018		1-161-042-00	0.033	1-161-019-00	1-161-057-00
0.0022		1-161-043-00	0.039	1-161-010-00	1-161-058-00
0.0027	→	1-161-044-00	0.047	1-161-021-00	1-161-059-00
0.0033	→	1-161-045-00	0.056	→	1-161-060-00
0.0039	→	1-161-046-00	0.068	→	1-161-061-00
0.0047	→	1-161-047-00	0.082	1-161-024-00	1-161-062-00
0.0056	→	1-161-048-00	0.1	1-161-025-00	1-161-063-00
0.0068	→	1-161-049-00			
0.0082	1-161-012-00	1-161-050-00			
0.01	1-161-013-00	1-161-051-00			
0.012	→	1-161-052-00			
0.015	1-161-015-00	1-161-053-00			

www.shortwaveradio.ch

MYLAR CAPACITORS

CAP. (μF)	RATING											
	50 VOLT.	100 VOLT.	200 VOLT.		50 VOLT.	100 VOLT.	200 VOLT.		50 VOLT.	100 VOLT.	200 VOLT.	
	PART No.	PART No.	PART No.		PART No.	PART No.	PART No.		PART No.	PART No.	PART No.	
0.001	1-108-227-00	1-108-365-00	1-108-409-00	0.01	1-108-239-00	1-108-377-00	1-108-421-00	0.1	1-108-251-00	1-108-389-00	1-108-433-00	
0.0012	1-108-351-00	1-108-366-00	1-108-410-00	0.012	1-108-357-00	1-108-378-00	1-108-422-00	0.12	1-108-363-00	1-108-390-00	1-108-434-00	
0.0015	1-108-228-00	1-108-367-00	1-108-411-00	0.015	1-108-240-00	1-108-379-00	1-108-423-00	0.15	1-108-252-00	1-108-391-00	1-108-435-00	
0.0018	1-108-352-00	1-108-368-00	1-108-412-00	0.018	1-108-358-00	1-108-380-00	1-108-424-00	0.18	1-108-364-00	1-108-392-00	1-108-436-00	
0.0022	1-108-230-00	1-108-369-00	1-108-413-00	0.022	1-108-242-00	1-108-381-00	1-108-425-00	0.22	1-108-254-00	1-108-393-00	1-108-437-00	
0.0027	1-108-353-00	1-108-370-00	1-108-414-00	0.027	1-108-359-00	1-108-382-00	1-108-426-00	0.27	1-108-854-00	–	–	
0.0033	1-108-232-00	1-108-371-00	1-108-415-00	0.033	1-108-244-00	1-108-383-00	1-108-427-00	0.33	1-108-855-00	–	–	
0.0039	1-108-354-00	1-108-372-00	1-108-416-00	0.039	1-108-360-00	1-108-384-00	1-108-428-00	0.39	1-108-856-00	–	–	
0.0047	1-108-234-00	1-108-373-00	1-108-417-00	0.047	1-108-246-00	1-108-385-00	1-108-429-00	0.47	1-108-857-00	–	–	
0.0056	1-108-355-00	1-108-374-00	1-108-418-00	0.056	1-108-361-00	1-108-386-00	1-108-430-00					
0.0068	1-108-237-00	1-108-375-00	1-108-419-00	0.068	1-108-249-00	1-108-387-00	1-108-431-00					
0.0082	1-108-356-00	1-108-376-00	1-108-420-00	0.082	1-108-362-00	1-108-388-00	1-108-432-00					

TANTALUM CAPACITORS

CAP. (μF)	RATING → : Use the high voltage rated one.						
	3.15 VOLT.	6.3 VOLT.	10 VOLT.	16 VOLT.	20 VOLT.	25 VOLT.	35 VOLT.
	PART No.	PART No.	PART No.	PART No.	PART No.	PART No.	PART No.
0.01					→	→	1-131-396-00
0.015						→	1-131-397-00
0.022						→	1-131-398-00
0.033						→	1-131-399-00
0.047						→	1-131-400-00
0.068					→	→	1-131-401-00
0.1					→	→	1-131-402-00
0.15					→	→	1-131-403-00
0.22					→	→	1-131-404-00
0.33					→	1-131-409-00	1-131-405-00
0.47	–	–	–	–	1-131-412-00	→	1-131-406-00
0.68	–	–	–	1-131-415-00	→	1-131-410-00	1-131-407-00
1.0	–	–	1-131-418-00	–	1-131-413-00	→	1-131-408-00
1.5	–	1-131-421-00	–	1-131-416-00	→	1-131-411-00	1-131-348-00
2.2	1-131-424-00	–	1-131-419-00	–	1-131-414-00	1-131-355-00	1-131-349-00
3.3	–	1-131-422-00	–	1-131-417-00	1-131-362-00	1-131-356-00	1-131-350-00
4.7	1-131-425-00	–	1-131-420-00	1-131-369-00	1-131-363-00	1-131-357-00	1-131-351-00
6.8	–	1-131-423-00	1-131-376-00	1-131-370-00	1-131-364-00	1-131-358-00	1-131-352-00
10	1-131-426-00	1-131-383-00	1-131-377-00	1-131-371-00	1-131-365-00	1-131-359-00	1-131-353-00
15	1-131-390-00	1-131-384-00	1-131-378-00	1-131-372-00	1-131-366-00	1-131-360-00	–
22	1-131-391-00	1-131-385-00	1-131-379-00	1-131-373-00	1-131-367-00		
33	1-131-392-00	1-131-386-00	1-131-380-00	1-131-374-00			
47	1-131-393-00	1-131-387-00	1-131-381-00	–			
68	1-131-394-00	1-131-388-00	–	–			
100	1-131-395-00	–	–	–			

TANTALUM CAPACITORS

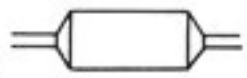

CAP. (μF)	RATING					
	3 VOLT.	6.3 VOLT.	10 VOLT.	16 VOLT.	20 VOLT.	35 VOLT.
	PART No.	PART No.	PART No.	PART No.	PART No.	PART No.
0.033						1-131-273-00
0.047						1-131-274-00
0.068						1-131-275-00
0.1						1-131-276-00
0.15						1-131-277-00
0.22			–	–	1-131-262-00	1-131-278-00
0.33			–	–	1-131-263-00	1-131-279-00
0.47			1-131-169-00	–	1-131-264-00	1-131-280-00
0.68			–	1-131-258-00	1-131-265-00	1-131-281-00
1.0			1-131-254-00	–	1-131-266-00	1-131-282-00
1.5		1-131-250-00	–	–	1-131-267-00	1-131-283-00
2.2		–	–	1-131-259-00	1-131-268-00	1-131-284-00
3.3		–	1-131-255-00	–	1-131-269-00	–
4.7		1-131-251-00	1-131-171-00	–	1-131-270-00	–
6.8		–	–	1-131-260-00	1-131-271-00	–
10	–	–	1-131-256-00	–	1-131-272-00	–
15	–	1-131-252-00	–	1-131-261-00		
22	–	–	1-131-257-00	–		
33	1-131-176-00	1-131-253-00	1-131-173-00	–		
47	1-131-288-00	1-131-174-00	–	–		
100	1-131-177-00					

www.shortwaveradio.ch

1/4 WATT CARBON RESISTORS

Ω	Part No.	Ω	Part No.	Ω	Part No.	Ω	Part No.	Ω	Part No.	Ω	Part No.	Ω	Part No.
1.0	1-246-401-00	10	1-246-425-00	100	1-246-449-00	1.0k	1-246-473-00	10k	1-246-497-00	100k	1-246-521-00	1.0M	1-246-545-00
1.1	1-246-402-00	11	1-246-426-00	110	1-246-450-00	1.1k	1-246-474-00	11k	1-246-498-00	110k	1-246-522-00	1.1M	1-210-814-00
1.2	1-246-403-00	12	1-246-427-00	120	1-246-451-00	1.2k	1-246-475-00	12k	1-246-499-00	120k	1-246-523-00	1.2M	1-210-815-00
1.3	1-246-404-00	13	1-246-428-00	130	1-246-452-00	1.3k	1-246-576-00	13k	1-246-500-00	130k	1-246-524-00	1.3M	1-210-816-00
1.5	1-246-405-00	15	1-246-429-00	150	1-246-453-00	1.5k	1-246-577-00	15k	1-246-501-00	150k	1-246-525-00	1.5M	1-210-817-00
1.6	1-246-406-00	16	1-246-430-00	160	1-246-454-00	1.6k	1-246-578-00	16k	1-246-502-00	160k	1-246-526-00	1.6M	1-210-818-00
1.8	1-246-407-00	18	1-246-431-00	180	1-246-455-00	1.8k	1-246-579-00	18k	1-246-503-00	180k	1-246-527-00	1.8M	1-210-819-00
2.0	1-246-408-00	20	1-246-432-00	200	1-246-456-00	2.0k	1-246-580-00	20k	1-246-504-00	200k	1-246-528-00	2.0M	1-210-820-00
2.2	1-246-409-00	22	1-246-433-00	220	1-246-457-00	2.2k	1-246-581-00	22k	1-246-505-00	220k	1-246-529-00	2.2M	1-210-821-00
2.4	1-246-410-00	24	1-246-434-00	240	1-246-458-00	2.4k	1-246-582-00	24k	1-246-506-00	240k	1-246-530-00	2.4M	1-244-754-00
2.7	1-246-411-00	27	1-246-435-00	270	1-246-459-00	2.7k	1-246-583-00	27k	1-246-507-00	270k	1-246-531-00	2.7M	1-244-755-00
3.0	1-246-412-00	30	1-246-436-00	300	1-246-460-00	3.0k	1-246-584-00	30k	1-246-508-00	300k	1-246-532-00	3.0M	1-244-756-00
3.3	1-246-413-00	33	1-246-437-00	330	1-246-461-00	3.3k	1-246-585-00	33k	1-246-509-00	330k	1-246-533-00	3.3M	1-244-757-00
3.6	1-246-414-00	36	1-246-438-00	360	1-246-462-00	3.6k	1-246-586-00	36k	1-246-510-00	360k	1-246-534-00	3.6M	1-244-758-00
3.9	1-246-415-00	39	1-246-439-00	390	1-246-463-00	3.9k	1-246-587-00	39k	1-246-511-00	390k	1-246-535-00	3.9M	1-244-759-00
4.3	1-246-416-00	43	1-246-440-00	430	1-246-464-00	4.3k	1-246-488-00	43k	1-246-512-00	430k	1-246-536-00	4.3M	1-244-760-00
4.7	1-246-417-00	47	1-246-441-00	470	1-246-465-00	4.7k	1-246-489-00	47k	1-246-513-00	470k	1-246-537-00	4.7M	1-244-761-00
5.1	1-246-418-00	51	1-246-442-00	510	1-246-466-00	5.1k	1-246-490-00	51k	1-246-514-00	510k	1-246-538-00	5.1M	1-244-762-00
5.6	1-246-419-00	56	1-246-443-00	560	1-246-467-00	5.6k	1-246-491-00	56k	1-246-515-00	560k	1-246-539-00		
6.2	1-246-420-00	62	1-246-444-00	620	1-246-468-00	6.2k	1-246-492-00	62k	1-246-516-00	620k	1-246-540-00		
6.8	1-246-421-00	68	1-246-445-00	680	1-246-469-00	6.8k	1-246-493-00	68k	1-246-517-00	680k	1-246-541-00		
7.5	1-246-422-00	75	1-246-446-00	750	1-246-470-00	7.5k	1-246-494-00	75k	1-246-518-00	750k	1-246-542-00		
8.2	1-246-423-00	82	1-246-447-00	820	1-246-471-00	8.2k	1-246-495-00	82k	1-246-519-00	820k	1-246-543-00		
9.1	1-246-424-00	91	1-246-448-00	910	1-246-472-00	9.1k	1-246-496-00	91k	1-246-520-00	910k	1-246-544-00		

HARDWARE NOMENCLATURE

Screw:

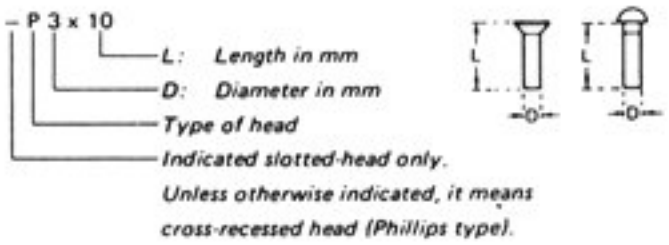

Nut, Washer, Retaining ring:

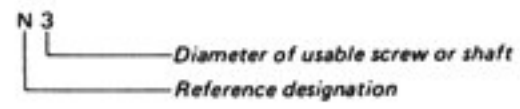

Reference Designation	Shape	Description	Remarks
SCREWS			
P		pan-head screw	binding-head (B) screw for replacement
PWH		pan-head screw with washer face	binding-head (B) screw and flat washer for replacement
PS PSP		pan-head screw with spring washer	binding-head (B) screw and spring washer for replacement
PSW PSPW		pan-head screw with spring and flat washers	binding-head (B) screw and spring and flat washers for replacement
R		round-head screw	binding-head (B) screw for replacement
K		flat-countersunk-head screw	
RK		oval-countersunk-head screw	
B		binding-head screw	
T		truss-head screw	binding-head (B) screw for replacement
F		flat-fillister-head screw	
RF		fillister-head screw	
BV		braizer-head screw	

Reference Designation	Shape	Description	Remarks
SELF-TAPPING SCREWS			
TA		self-tapping screw	ex: TA, P 3 x 10
PTP		pan-head self-tapping screw	binding-head self-tapping (TA, B) screw for replacement
PTPWH		pan-head self-tapping screw with washer face	binding-head self tapping (TA, B) screw and flat washer for replacement
PTTWH		pan-head thread-rolling screw with washer face	binding-head (B) screw and flat washer for replacement
SET SCREWS			
SC		set screw	
SC		hexagon-socket set screw	ex: SC 2.6 x 4, hexagon socket
NUT			
N		nut	
WASHERS			
W		flat washer	
SW		spring washer	
LW		internal-tooth lock washer	ex: LW3, internal
LW		external-tooth lock washer	ex: LW3, external
RETAINING RINGS			
E		retaining ring	
G		grip-type retaining ring	

www.shortwaveradio.ch

CRF-1

9-950-501-11

Sony Corporation
© 1980
80D0582-1
Printed in Japan

www.shortwaveradio.ch